ANEST IWATA

PROFESSIONAL
COATING
EQUIPMENT
SPECIALIST

2021 PRICE LIST

SPRAY GUNS
& ACCESSORIES
for CAR
REFINISH

ANEST IWATA

BEYOND **any** BOUNDARY

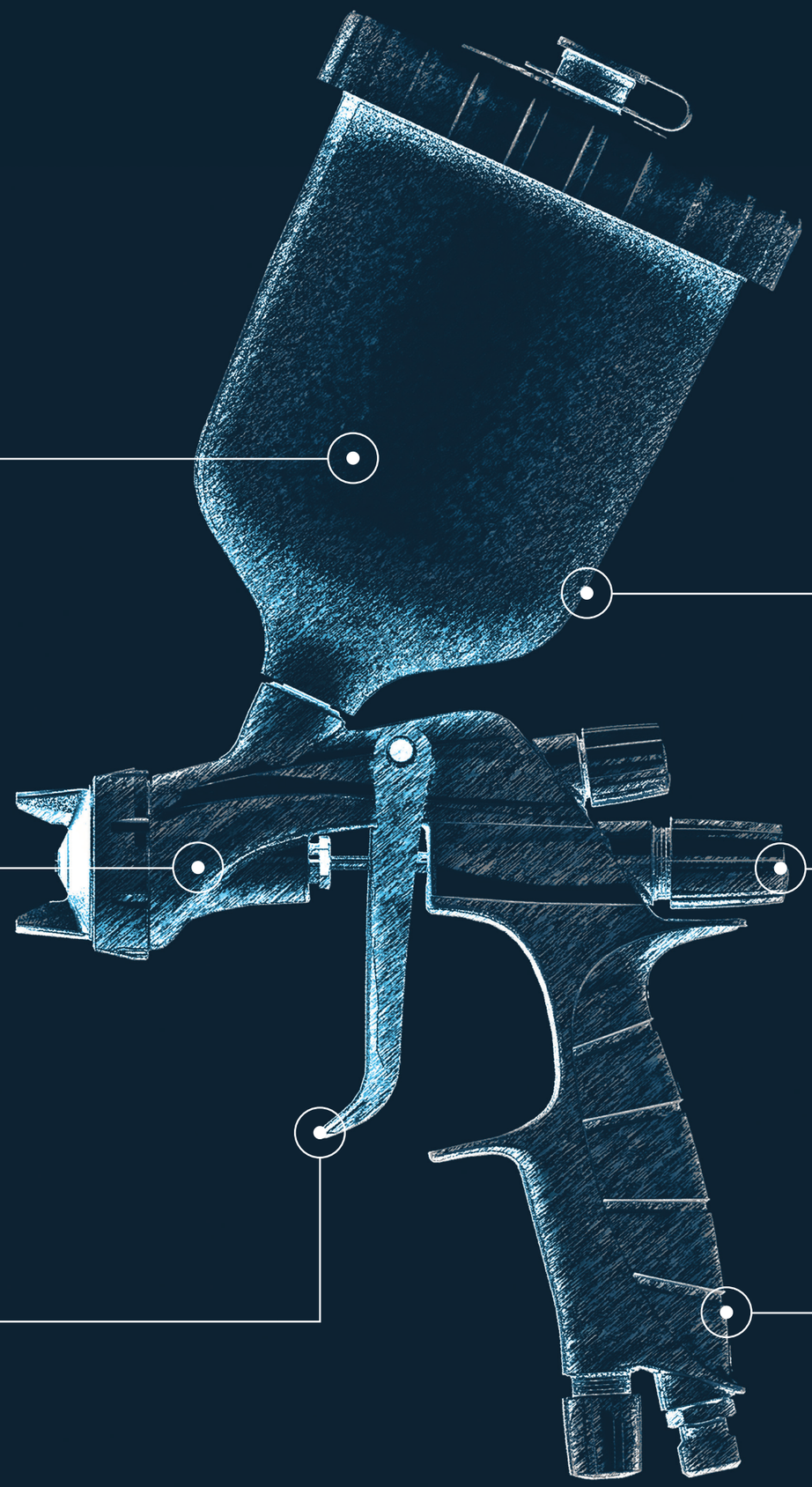

GROUP
Anest Iwata carries more than 90 years-experience in the coating industry, combining the most sophisticated Japanese craftmanship tradition to the continuous search for leading-edge technology.

A WIDE RANGE
Our range of products varies from several spray guns lines, pumps and painting accessories, projected ad hoc for different paint application and to satisfy the customer in his research for the best solution.

PASSION & PERFORMANCE
As a global group we aim to deliver the most technically advanced spraying equipment on the market. When designing our products we think about highly professional and creative individual who have passion for painting and are looking for the greatest performance.

CUSTOMER ORIENTED
The automotive refinish, together with the industrial and the wood sector are only fiew of the areas in which the Anest Iwata experience has found its appreciation between the users, not only for the excellence of our tools, but also for the attentive service our customers can count on.

With this in mind we always try to reach for the highest standards of sophistication, creativity and technical realization.

Anest Iwata effort in providing the best results in performance is also conceived for the optimization of the resources and materials in the optic of begin environmental-friendly.

SPRAY GUNS & ACCESSORIES for CAR REFINISH

Whether it's a first installation, a self-repair or a small retouch (spot repair) **Anest Iwata** has always been the point of reference for professional painters. The experience in the development of varnishing guns for the automotive sector has strengthened its image over time.

SPRAY GUNS & ACCESSORIES for CAR REFINISH

INDEX

1 MANUAL SPRAY GUNS

CLEARCOAT
PREMIUM QUALITY
WS-400 EVO CLEAR....10
HIGH QUALITY
W-400 WBX Classic Plus....12

BASECOAT
PREMIUM QUALITY
LS-400 ENTECH (HVLP)....14
WS-400 EVO BASE....16
HIGH QUALITY
W-400 WB2 Classic Plus....18

PRIMER
PREMIUM QUALITY
LPH 300 (LVLP)....20
HIGH QUALITY
W-400 Bellaria Classic Plus....22
STANDARD QUALITY
AZ3 HTE-S Impact....24

SPRAY PUTTY
STANDARD QUALITY
AZ3 HTE2 HVLP....26
AZ3 HTE P.A.S. Concept....28

SMART REPAIR
PREMIUM QUALITY
W-300 WB High T.E.C....30
STANDARD QUALITY
W-300 High T.E.C....30
W-300 WB UV Cured Paints....32
AZ4 HTE-S Impact Junior....34

SPOT REPAIR
PREMIUM QUALITY
LPH-80 (LVLP)....36

CUSTOM PAINTING
HIGH QUALITY
RG-3L Round Pattern....38
STANDARD QUALITY
AIRBRUSHES....40

2 PRESSURE SPRAY GUN

COMMERCIAL VEHICLE APPLICATION
PREMIUM QUALITY
WS-200 Pressure Series....42
PREMIUM/HIGH QUALITY
W-200 Integra Pressure Series....44
W-200 Integra Suction Series....46

UNIVERSAL
PREMIUM QUALITY
W-400 Classic Plus....48
STANDARD QUALITY
AZ3 HTE 2....50

3 PAINT SUPPLY SYSTEM

DOUBLE DIAPHRAGM PAINT PUMPS
DPS-120C & DPS-90G
DOUBLE DIAPHRAGM PAINT PUMPS & ACCESSORIES....54

PRESSURE TANKS
PAINT PRESSURE TANKS
PET-series (max. 7.0 bar 10 lt./30 lt./50 lt.)....58
PET-10 (max 4.0 bar) 10 lt....60
PC-18D (max. 3.5 bar) 2lt....61

4 CUPS - FILTERS and ADAPTERS

GRAVITY CUPS & PAINT FILTERS
GRAVITY CUPS....64
FILTERS & ADAPTERS....65
BLACK "UV" CUPS....66
ALUMINIUM GRAVITY CUPS/ HIGH T.E.C. Paint Filters....67

5 GENERAL ACCESSORIES

HEALTH PROTECTION
Anest Iwata OVERALL....70
VISIONSHIELD series (goggles & glasses)....71
VIPER Half face guard mask....72
AIRFED 2020 Full face mask....73

6 CLEANING and MAINTENANCE

SPRAY GUN CLEANING APPLICATORS
PCA12.0 / HCA12.0....76
CLEANING and MAINTENANCE TOOLS
Brushes/Spanner/Grease/ Air duster gun....78
SPRAY GUN WASHERS
KUIK mini gun washer/ manual washing....80
IWK-H2O gun washer/ manual washing....81
INOX LINE SOL (SLD) gun washer/ manual and automatic washing....82
INOX LINE SOL (ILD) gun washer and distiller / totally pneumatic....82
INOX LINE SOL-B and SOL-C gun washer/automatic final cleaning....82
SPRAY GUN SUPPORTS
MAGNETIC SUPPORTS & GRAVITY GUN HOLDERS....84
SPRAY CONTROL
MAGNETIC SPRAY TESTER....85
AIR FILTERING
AIR FILTER REGULATOR 1/2" (Single-stage, Double-stage, Tri-stage)....86

AIR SUPPLY
CONDUCTIVE AIR/FLUID
HOSES & COUPLINGS....87

PRESSURE SETTING
AIR PRESSURE REGULATORS
(HVC-1/AFV-2)....88
(AFV-1/ImpactController2)....89

7 DRYING SYSTEM

INFRARED UNITS
(series 1 kw-3 kw-4,5 kw-6 kw)....92
ADG-1B AQUADRY Paint dryer....94
AI JET Air noozle dryer....95

DEMO TOOLS
DEMO TROLLEY....96

OTHER ACCESSORIES
AZ PVA TN Undercoat gun....97

8 GENERAL INFORMATION

PAINTING TIPS....98
SALES CONDITIONS....99

9 SUPERSEDED PRODUCTS

W-200 Pressure & Suction....102
AZ5....104
AZ40 HTE....105

ICONS LEGEND
- NOZZLE SIZE
- AIR CAP SET
- AIR PRESSURE
- FLUID OUTPUT
- AIR CONSUMPTION
- PATTERN WIDTH

APPLICATION CHART

	PREMIUM		HIGH		STANDARD	
	GRAVITY	PRESSURE	GRAVITY	PRESSURE	GRAVITY	PRESSURE
CLEAR COAT	WS-400 EVO CLEAR P. 10	WS-200 SP P. 42	WS-400 WBX P. 12	NEW W-200 INTEGRA P. 44		
BASE COAT	LS-400 ENTECH P. 14	WS-200 SP P. 42	W-400 WB P. 18	NEW W-200 INTEGRA P. 44		
PRIMER	LPH-300 (LVLP) P. 20	WS-200 SP P. 42	W-400 BELLARIA P. 22	NEW W-200 INTEGRA P. 44		AZ3 HTE-S IMPACT P. 24
SPRAY PUTTY					AZ3 HTE2 HVLP P. 26	AZ3 HTE P.A.S. CONCEPT P. 28
SPOT REPAIR	LPH-80 P. 36				NEW AZ4 HTE-S JUNIOR P. 34	
SMART REPAIR	W-300 WB P. 30	W-300 WB UV P. 32			AZ40 HTE P. 105	
CUSTOM PAINTING			RG-3L P. 38		AZ5 P. 104	

ANEST IWATA

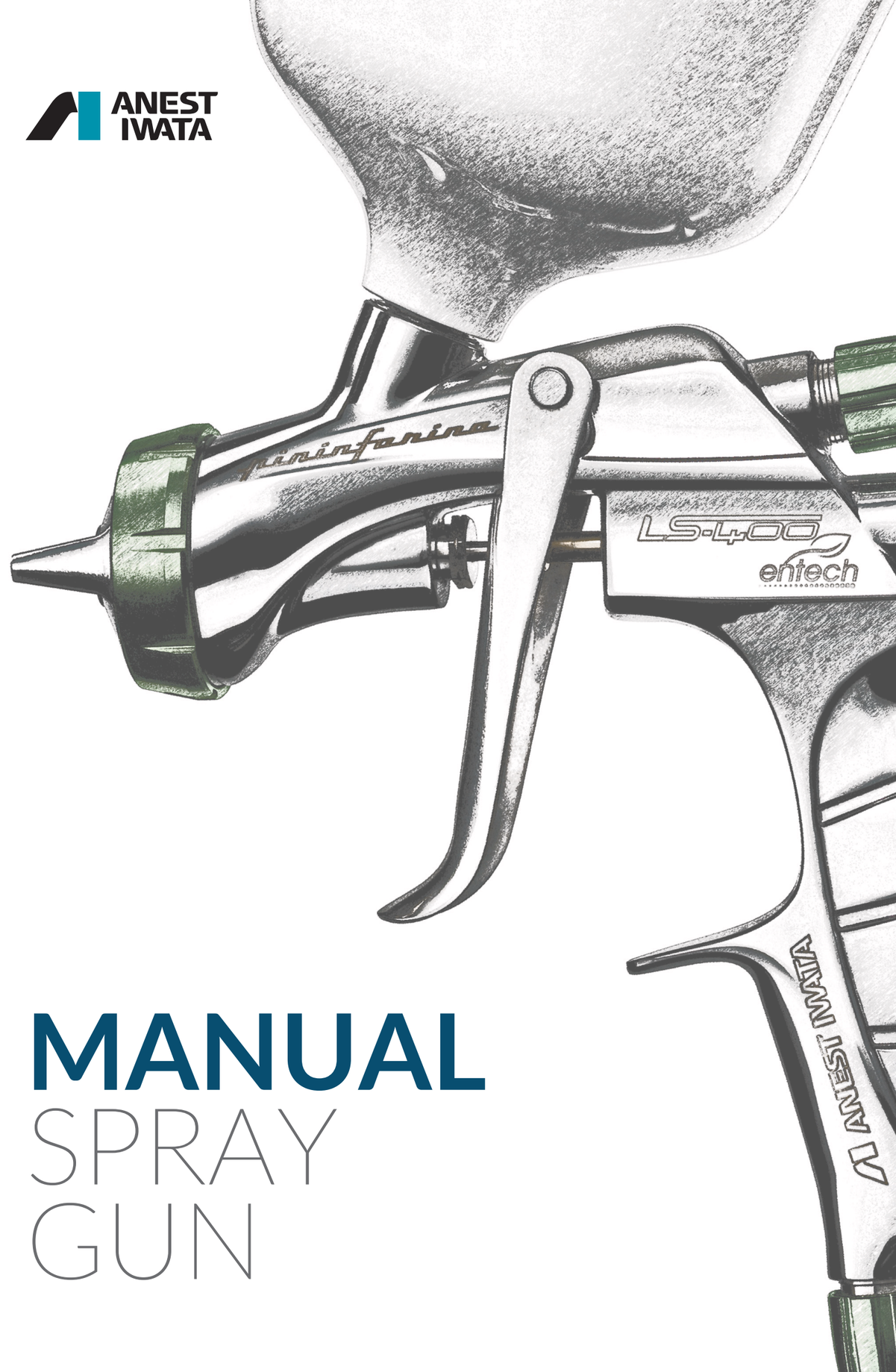

MANUAL SPRAY GUN

CLEARCOAT

WS-400 EvoClear

PREMIUM QUALITY

FEATURES

Perfect surfaces thanks to the Split Nozzle™ technology
High fluid transfer by a large and uniform spray pattern
Very fine atomization
VOC-compliant professional spray gun (more than 65% transfer efficiency)
Clearly visible reduction of “fat edges”
Low background noise
Lightweight spray gun body
Simple adjustment of the control knobs, both for right and left handers
Conical seal nozzle, minimum wear parts
Clearer design, easy maintenance
Quality surface for easy cleaning

SPLIT NOZZLE™
PRE-ATOMIZATION TECHNOLOGY

TECHNICAL DATA	Ø mm	No.	bar	mℓ/min	Nℓ/min	mm			
WS-400 -1301 EVO	1.3	WS-400-01	2.0	170	370	Spray Distance 130 mm	260	Spray Distance 200 mm	365
WS-400 -1401 EVO	1.4			190					370
WS-400 -1301HD EVO	1.3 HD (1.3.2)			220			265		365
WS-400 -1401HD EVO	1.4 HD (1.4.2)			240			270		370
WS-400 -1501HD EVO	1.5 HD (1.5.2)			260			275		

• HD (High Delivery) • Air Nipple: G1/4” • Fluid Nipple: G1/4”

designed by pininfarina

PRO KIT- CARTON BOX or PLASTIC CASE

WS-400 Evo Clear Spray Gun
PC-G600P-2 CUP - 600 ml
Cleaning Brushes - Universal Spanner

ORDER INFORMATION

	ø 1,3	ø 1,4	ø 1,3 HD	€
WS-400 -MASTER KIT	13244115E	13244117E	13244122E	599,50
WS-400 EVO - PRO KIT (Plastic Case)	13244115EPL	13244117EPL	13244122EPL	545,00
WS-400 EVO - PRO KIT (Carton Box)	13244115EP	13244117EP	13244122EP	530,00
AIR CAP SET (WS-400-01)	93505300			103,00
FLUID NOZZLE + FLUID NEEDLE SET	93506410	93506820	93506910	127,50

MASTER KIT PLASTIC CASE

WS-400 Evo Clear Spray Gun
PC-G600P-2 CUP 600 ml
Air Regulator AFV-1
Cleaning Brushes
Universal Spanner

	ø 1,4 HD	ø 1,5 HD	€
WS-400 -MASTER KIT	13244124E	13244126E	599,50
WS-400 EVO - PRO KIT (Plastic Case)	13244124EPL	13244126EPL	545,00
WS-400 EVO - PRO KIT (Carton Box)	13244124EP	13244126EP	530,00
AIR CAP SET (WS-400-01)	93505300		103,00
FLUID NOZZLE + FLUID NEEDLE SET	93506920	93506930	127,50

FILTERCUP
PROPER ADJUSTMENT

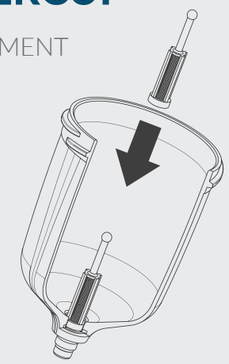

ANEST IWATA

WS-400 Evo Clear

PC-G600P-2
GRAVITY CUP 600 ml

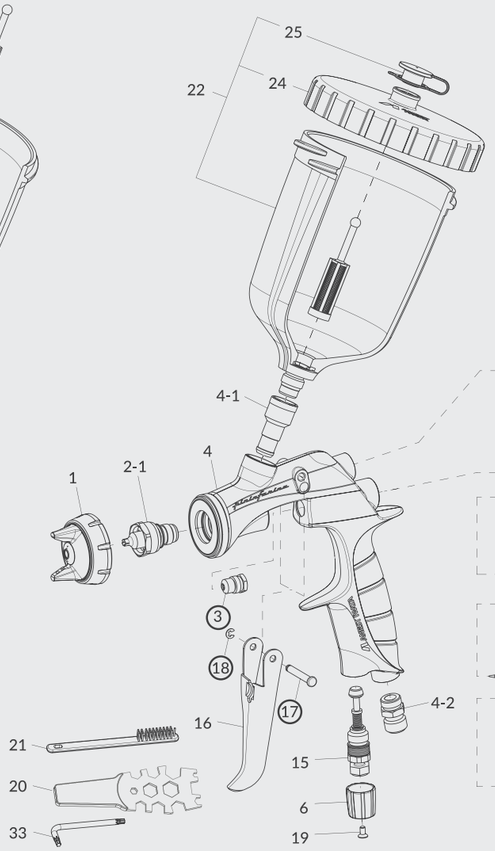

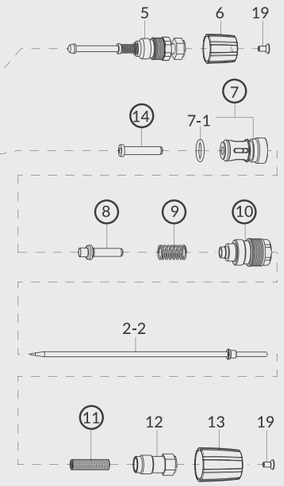

AFV-1
AIR REGULATOR

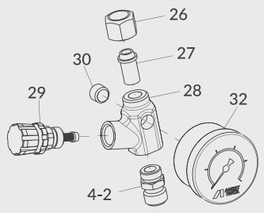

SPARE PARTS

REF.	CODE	DESCRIPTION	QTY.	€
1		AIR CAP SET		103,00
2-1+ 2-2		FLUID NOZZLE + FLUID NEEDLE SET		127,50
3	93810620	NEEDLE PACKING SET		25,85
4-1	93505421	FLUID NIPPLE		55,00
4-2	03660300	AIR NIPPLE		9,50
5	93505432	PATTERN ADJ. SET		44,50
6	93505471	ADJ. KNOB (Chrome)		12,00
7	03843530	AIR VALVE SEAT SET		24,00
7-1	06638008	‘O’RING		2,50
8	93505480	AIR VALVE		15,00
9	03719530	AIR VALVE SPRING		7,00
10	93505492	FLUID ADJ. GUIDE SET		33,00
11	03593530	FLUID NEEDLE SPRING		7,00
12	93505823	FLUID ADJ. SCREW SET		12,00
13	93505831	FLUID ADJ. KNOB (Chrome)		12,00
14	93935430	AIR VALVE SHAFT		13,00
15	93505842	AIR ADJ. SET		33,50
16	93505850	TRIGGER		16,00
17	93505860	TRIGGER STUD		5,00
18	96612025	E STOPPER		2,50
19	93506970K	COUNTERSUNK HEAD SCREW (Chrome)	(3 pcs./1 pk.)	14,00
20	930171A0	UNIVERSAL SPANNER		7,00
21	W2COM6163	BRUSHES	(5 pcs./1 pk.)	11,00

REF.	CODE	DESCRIPTION	€
22	14019100	PC-G600P-2 GRAVITY CUP 600 ml	56,50
24	94011220	LID	31,00
25	94011230	NON DRIP	1,60
	14378610	AIR REGULATOR AFV-1	69,50
26	94017021	CAP NUT	5,50
27	94006220	JOINT SEAT	9,00
28	94006231	BODY	27,00
29	94006240	AIR REGULATOR VALVE SET	24,50
30	96990425	PLUG	5,00
32	W3COM6065	PRESSURE GAUGE	19,95
33	03506480K	ALLEN WRENCH SET (3 pcs./1 pk.)	5,00

ACCESSORIES

CODE	DESCRIPTION	€
93505330	AIR CAP PACKING (WHITE)	4,70
93505341	AIR CAP “L” PACKING (BLACK)	6,10
W2KIT55UK	CLEANING KIT	60,50
W2COM6189	REPAIRING KIT 1 (includes: air valve seat set, air valve, air valve spring, fluid needle spring, air valve shaft, fluid adj. guide set, trigger stud, e stopper, needle packing cartridge).	95,50
94011240	FILTER 60 Mesh (250µ)	1,85

CLEARCOAT

W-400WBX Classic Plus

HIGH QUALITY

FEATURES

Perfect surfaces thanks to the Split Nozzle™ technology
VOC-compliant professional spray gun (more than 65% transfer efficiency)
Very fine atomization
Clearly visible reduction of “fat edges”
Low background noise
380 g: one of most lightweight spray guns on the market
Conical seal nozzle, minimum wear parts
Quality surface for easy cleaning
Clearer design, easy maintenance

SPLIT NOZZLE™
PRE-ATOMIZATION TECHNOLOGY

TECHNICAL DATA	Ø mm	No.	bar	mℓ/min	Nℓ/min	mm
W-400 WBX-124G	1.2	WBX	2.0	150	370	360
W-400 WBX-134G	1.3			195		390
W-400 WBX-144G	1.4			200		

• Air nipple: G1/4” • Fluid nipple: M16 x 1.5mm

Classic WBX plus

PRO KIT- **CARTON** BOX
W-400 WBX Spray Gun
PCG 6 PE CUP - 600 ml
Cleaning Brushes
Universal Spanner

ORDER INFORMATION

	ø 1,2	ø 1,3	ø 1,4	€
W-400 WBX - PRO KIT (Carton Box)	13241422P	13241423P	13241424P	418,00
AIR CAP SET (WBX)	93622630			95,00
FLUID NOZZLE + FLUID NEEDLE SET	93627610	93634610	93628610	121,50

PCG-6-PE
GRAVITY
CUP
600 ml

ANEST IWATA

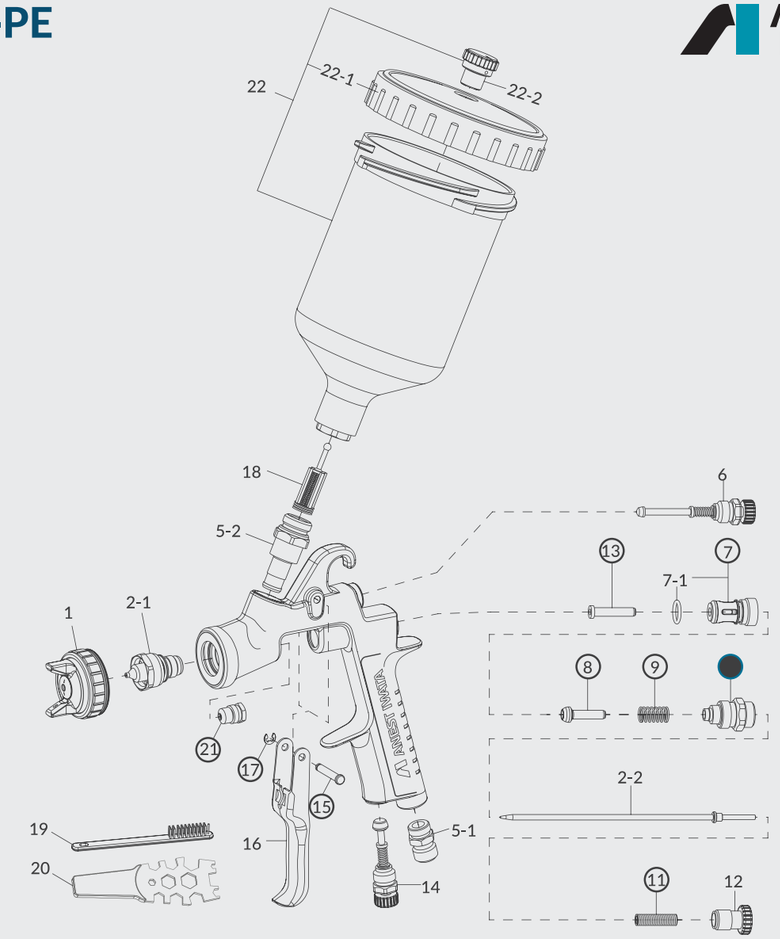

SPARE PARTS

REF.	CODE	DESCRIPTION	QTY.	€
1		AIR CAP SET		95,00
2-1+ 2-2		FLUID NOZZLE + FLUID NEEDLE SET		121,50
5-1	03660300	AIR NIPPLE		9,50
5-2	93650531	FLUID NIPPLE		65,00
6	93842601	PATTERN ADJ. SET		35,00
7	03843530	AIR VALVE SEAT SET		24,00
7-1	06638008	‘O’ RING		2,50
8	03591530	AIR VALVE		16,50
9	03719530	AIR VALVE SPRING		7,00
10	93844532	FLUID ADJ. GUIDE SET		36,50
11	03593530	FLUID NEEDLE SPRING		7,00
12	93594532	FLUID ADJ. KNOB		14,50
13	93935430	AIR VALVE SHAFT		13,00
14	93845531	AIR ADJ. SET		36,50
15	03667360	TRIGGER STUD		4,00
16	03517600	TRIGGER		17,00
17	03912030	E STOPPER	(2 pcs./1 pk.)	3,50
18	03515500	FILTER 60 Mesh (250µ)		1,85
21	93810620	NEEDLE PACKING SET		25,85
19	W2COM6163	BRUSHES	(5 pcs./1 pk.)	11,00
20	930171A0	UNIVERSAL SPANNER		7,00

REF.	CODE	DESCRIPTION	€
22	**14011001**	**PCG-6-PE GRAVITY CUP 600 ml**	51,50
22-1	04002300	LID	9,00
22-2	04003320	NON DRIP	2,00

ACCESSORIES

CODE	DESCRIPTION	€
03708240	AIR CAP PACKING (WHITE)	2,70
03512600	AIR CAP “L” PACKING (BLACK)	4,80
W2KIT55UK	CLEANING KIT	60,50
W2COM6190	REPAIRING KIT 2 (includes: air valve seat set, air valve, air valve spring, fluid needle spring, fluid adj. guide set, air valve shaft, trigger stud, e stopper, needle packing cartridge).	95,50

BASECOAT

LS-400 Entech (HVLP)

PREMIUM QUALITY

FEATURES

- Perfect surfaces thanks to the Split Nozzle™ technology
- Soft spray pattern for easy handling when blending
- High fluid transfer, maximum material saving
- Large and uniform spray pattern
- Consistent droplet size
- VOC-compliant professional spray gun (more than 65% transfer efficiency)
- Clearly visible reduction of "fat edges"
- Low background noise
- Lightweight spray gun body
- Simple adjustment of the control knobs, for right and left handers
- Conical seal nozzle, minimum wear parts
- Clearer design, easy maintenance
- Quality surface for easy cleaning

SPLIT NOZZLE™
PRE-ATOMIZATION TECHNOLOGY

TECHNICAL DATA	Ø mm	No.	bar	mℓ/min	Nℓ/min	Spray Distance 130 mm		Spray Distance 200 mm		Spray Distance 200 mm
						mm		mm		mm
LS-400-1205	1.2 ET	LS-400-05	1.8	150	400	250		350		-
LS-400-1305	1.3 ET			160						-
LS-400-1405	1.4 ET			170		260		360		-
LS-400-1505	1.5 ET			180		265		365		-
LS-400-ETS12	1.2 ETS			150	420	230		305		390
LS-400-ETS13	1.3 ETS			160		235		310		400
LS-400-ETS14	1.4 ETS			180						410
LS-400-ETS15	1.5 ETS			190		240		320		425

• ET: Standard Distance • ETS: Wetter & Longer Spray Distance • Air Nipple: G1/4" • Fluid Nipple: G1/4"

designed by pininfarina

PRO KIT- CARTON BOX or PLASTIC CASE
LS-400 Entech Spray Gun
PC-G600P-2 CUP - 600 ml
Cleaning Brushes - Universal Spanner

MASTER KIT - PLASTIC CASE
LS-400 Entech Spray Gun
PC-G600P-2 CUP - 600 ml
Air Regulator AFV-1
Cleaning Brushes - Universal Spanner

ORDER INFORMATION

ET	ø 1,2	ø 1,3	ø 1,4	ø 1,5	€
LS-400 - MASTER KIT	13186521	13186533	13186544	13186551	610,00
LS-400 - PRO KIT (Plastic Case)	13186521PL	13186533PL	13186544PL	13186551PL	555,50
LS-400 - PRO KIT (Carton Box)	13186521P	13186533P	13186544P	13186551P	540,50
AIR CAP SET (LS-400-05)	93512100				103,00
FLUID NOZZLE + FLUID NEEDLE SET	93512140	93512160	93512190	93512210	127,50

ETS	ø 1,2	ø 1,3	ø 1,4	ø 1,5	€
LS-400 - MASTER KIT	13186522	13186534	13186545	13186552	610,00
LS-400 - PRO KIT (Plastic Case)	13186522PL	13186534PL	13186545PL	13186552PL	555,50
LS-400 - PRO KIT (Carton Box)	13186522P	13186534P	13186545P	13186552P	540,50
AIR CAP SET (LS-400-05)	93512100				103,00
FLUID NOZZLE + FLUID NEEDLE SET	93512760	93512780	93513120	93513140	127,50

FILTER CUP
PROPER ADJUSTMENT

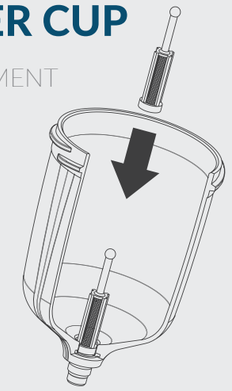

AFV-1
AIR REGULATOR

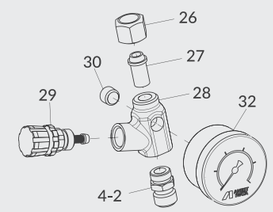

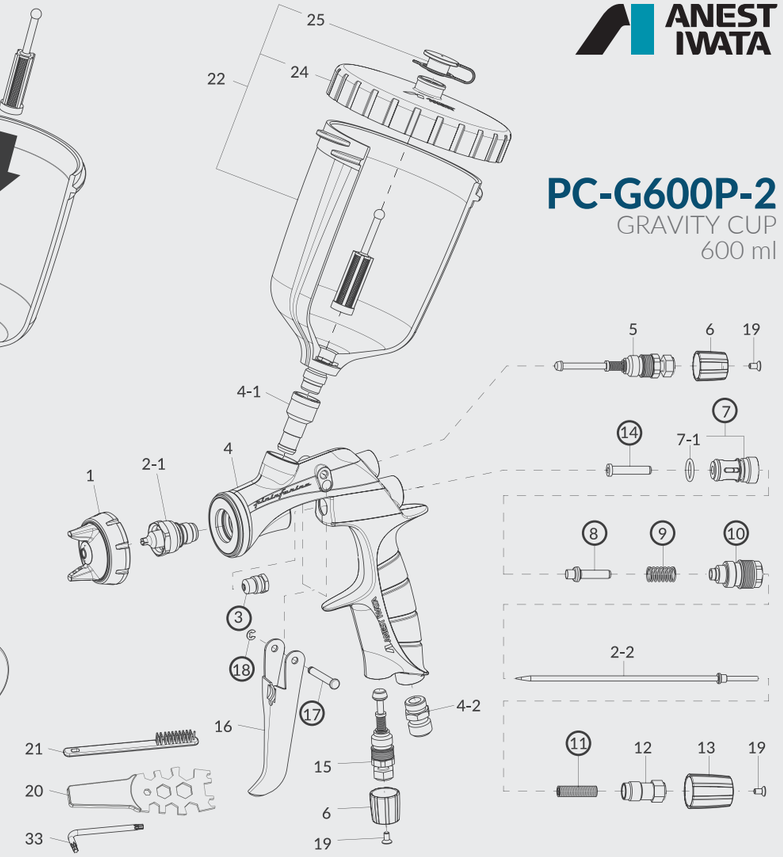

PC-G600P-2
GRAVITY CUP
600 ml

SPARE PARTS

REF.	CODE	DESCRIPTION	QTY.	€
1		AIR CAP SET		103,00
2-1+ 2-2		FLUID NOZZLE + FLUID NEEDLE SET		127,50
3	93810620	NEEDLE PACKING SET		25,85
4-1	93505421	FLUID NIPPLE		55,00
4-2	03660300	AIR NIPPLE		9,50
5	93505432	PATTERN ADJ. SET		44,50
6	93512290	ADJ. KNOB (Green)		14,00
7	03843530	AIR VALVE SEAT SET		24,00
7-1	06638008	'O'RING		2,50
8	93505480	AIR VALVE		15,00
9	03719530	AIR VALVE SPRING		7,00
10	93505492	FLUID ADJ. GUIDE SET		33,00
11	03593530	FLUID NEEDLE SPRING		7,00
12	93505823	FLUID ADJ. SCREW SET		12,00
13	93512730	FLUID ADJ. KNOB (Green)		12,00
14	93935430	AIR VALVE SHAFT		13,00
15	93505842	AIR ADJ. SET		33,50
16	93505850	TRIGGER		16,00
17	93505860	TRIGGER STUD		5,00
18	96612025	E STOPPER		2,50
19	93512740K	COUNTERSUNK HEAD SCREW (Black)	(3 pcs./1 pk.)	11,50
20	930171A0	UNIVERSAL SPANNER		7,00
21	W2COM6163	BRUSHES	(5 pcs./1 pk.)	11,00

REF.	CODE	DESCRIPTION	€
22	14019100	PC-G600P-2 GRAVITY CUP 600 ml	56,50
24	94011220	LID	31,00
25	94011230	NON DRIP	1,60
	14378610	AIR REGULATOR AFV-1	69,50
26	94017021	CAP NUT	5,50
27	94006220	JOINT SEAT	9,00
28	94006231	BODY	27,00
29	94006240	AIR REGULATOR VALVE SET	24,50
30	96990425	PLUG	5,00
32	W3COM6065	PRESSURE GAUGE	19,95
33	03506480K	ALLEN WRENCH SET (3 pcs./1 pk.)	5,00

ACCESSORIES

CODE	DESCRIPTION	€
93505330	AIR CAP PACKING (WHITE)	4,70
93505341	AIR CAP "L" PACKING (BLACK)	6,10
W2KIT55UK	CLEANING KIT	60,50
W2COM6189	REPAIRING KIT 1 (includes: air valve seat set, air valve, air valve spring, fluid needle spring, air valve shaft, fluid adj. guide set, trigger stud, e stopper, needle packing cartridge).	95,50
94011240	FILTER 60 Mesh (250µ)	1,85

BASECOAT

WS-400 EvoBase

PREMIUM QUALITY

FEATURES

Perfect surfaces thanks to the Split Nozzle™ technology
Soft spray pattern for easy handling when blending
High fluid transfer, maximum material saving
Large and uniform spray pattern
VOC-compliant professional spray gun (more than 65% transfer efficiency)
Clearly visible reduction of "fat edges"
Low background noise
Lightweight spray gun body
Simple adjustment of the control knobs, for right and left handers
Conical seal nozzle, minimum wear parts
Clearer design, easy maintenance
Quality surface for easy cleaning

SPLIT NOZZLE™
PRE-ATOMIZATION TECHNOLOGY

TECHNICAL DATA	Ø mm	No.	bar	mℓ/min	Nℓ/min	mm			
WS-400 -1201 EVO	1.2	WS-400-01	2.0	120	370	Spray Distance 130 mm	250	Spray Distance 200 mm	350
WS-400 -1301 EVO	1.3			140			260		365
WS-400 -1401 EVO	1.4			170					
WS-400 -1301HD EVO	1.3 HD (1.3.2)			220			265		
WS-400 -1401HD EVO	1.4 HD (1.4.2)			240			270		370
WS-400 -1501HD EVO	1.5 HD (1.5.2)			260			275		
WS-400 -1301OBS EVO	1.3 OBS			160			260		365

• HD (High Delivery) • OBS (Optimized Basecoat Setting) • Air Nipple: G1/4" • Fluid Nipple: G1/4"

designed by pininfarina

PRO KIT- CARTON BOX or PLASTIC CASE
WS-400 Evo Base Spray Gun
PC-G600P-2 CUP - 600 ml
Cleaning Brushes - Universal Spanner

ORDER INFORMATION

	ø 1,2	ø 1,3	ø 1,4	ø 1,3 HD	€
WS-400 EVO - MASTER KIT TER KIT	13244112E	13144113E	13244116E	13244121E	599,50
WS-400 EVO - PRO KIT (Plastic Case)	13244112EPL	13244113EPL	13244116EPL	13244121EPL	545,00
WS-400 EVO - PRO KIT (Carton Box)	13244112EP	13244113EP	13244116EP	13244121EP	530,00
AIR CAP SET (WS-400-01)	93505300				103,00
FLUID NOZZLE + FLUID NEEDLE SET	93506400	93505350	93506800	93506910	127,50

MASTER KIT - PLASTIC CASE
WS-400 Evo Base Spray Gun
PC-G600P-2 CUP - 600 ml
Air Regulator AFV-1
Cleaning Brushes - Universal Spanner

	ø 1,3 OBS	ø 1,4 HD	ø 1,5 HD	-	€
WS-400 EVO - MASTER KIT	13244118E	13244123E	13244125E	-	599,50
WS-400 EVO - PRO KIT (Plastic Case)	13244118EPL	13244123EPL	13244125EPL	-	545,00
WS-400 EVO - PRO KIT (Carton Box)	13244118EP	13244123EP	13244125EP	-	530,00
AIR CAP SET (WS-400-01)	93505300				103,00
FLUID NOZZLE + FLUID NEEDLE SET	93506850	93506920	93506930	-	127,50

FILTER CUP
PROPER ADJUSTMENT

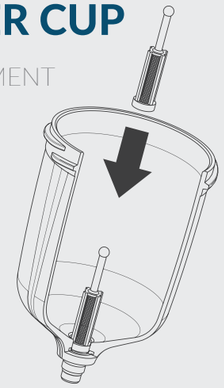

AFV-1
AIR REGULATOR

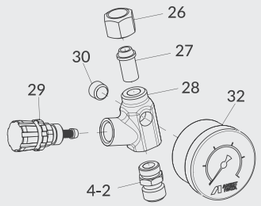

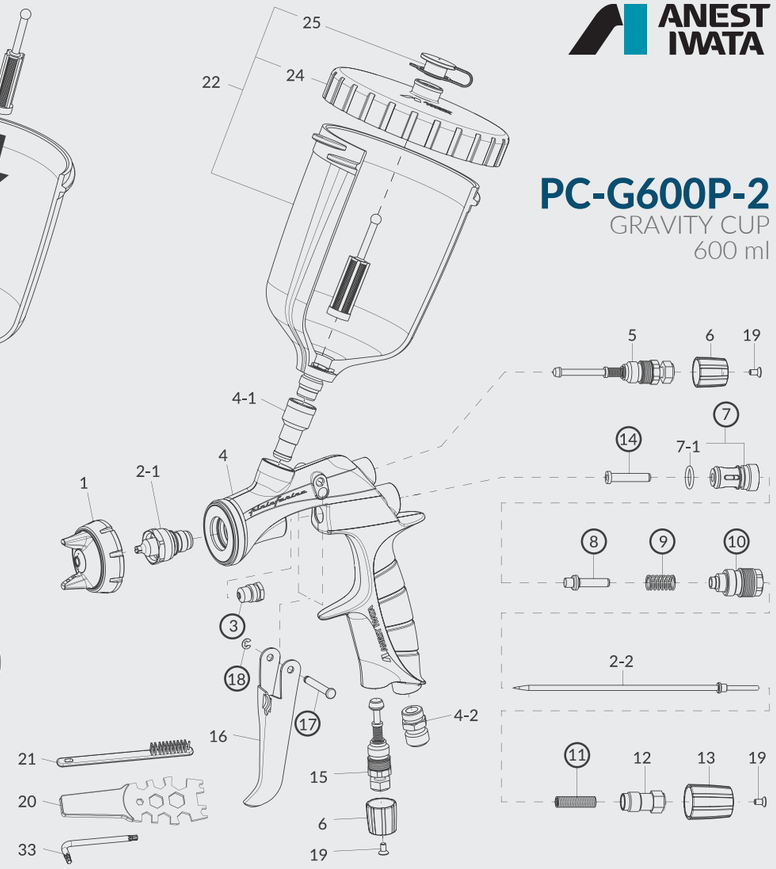

PC-G600P-2
GRAVITY CUP
600 ml

SPARE PARTS

REF.	CODE	DESCRIPTION	QTY.	€
1		AIR CAP SET		103,00
2-1+ 2-2		FLUID NOZZLE + FLUID NEEDLE SET		127,50
3	93810620	NEEDLE PACKING SET		25,85
4-1	93505421	FLUID NIPPLE		55,00
4-2	03660300	AIR NIPPLE		9,50
5	93505432	PATTERN ADJ. SET		44,50
6	93506462	ADJ. KNOB (Gold)		12,00
7	03843530	AIR VALVE SEAT SET		24,00
7-1	06638008	'O'RING		2,50
8	93505480	AIR VALVE		15,00
9	03719530	AIR VALVE SPRING		7,00
10	93505492	FLUID ADJ. GUIDE SET		33,00
11	03593530	FLUID NEEDLE SPRING		7,00
12	93505823	FLUID ADJ. SCREW SET		12,00
13	93506472	FLUID ADJ. KNOB (Gold)		12,00
14	93935430	AIR VALVE SHAFT		13,00
15	93505842	AIR ADJ. SET		33,50
16	93505850	TRIGGER		16,00
17	93505860	TRIGGER STUD		5,00
18	96612025	E STOPPER		2,50
19	93506980K	COUNTERSUNK HEAD SCREW (Gold)	(3 pcs./1 pk.)	13,00
20	930171A0	UNIVERSAL SPANNER		7,00
21	W2COM6163	BRUSHES	(5 pcs./1 pk.)	11,00

REF.	CODE	DESCRIPTION	€
22	14019100	PC-G600P-2 GRAVITY CUP 600 ml	56,50
24	94011220	LID	31,00
25	94011230	NON DRIP	1,60
	14378610	AIR REGULATOR AFV-1	69,50
26	94017021	CAP NUT	5,50
27	94006220	JOINT SEAT	9,00
28	94006231	BODY	27,00
29	94006240	AIR REGULATOR VALVE SET	24,50
30	96990425	PLUG	5,00
32	W3COM6065	PRESSURE GAUGE	19,95
33	03506480K	ALLEN WRENCH SET (3 pcs./1 pk.)	5,00

ACCESSORIES

CODE	DESCRIPTION	€
93505330	AIR CAP PACKING (WHITE)	4,70
93505341	AIR CAP "L" PACKING (BLACK)	6,10
W2KIT55UK	CLEANING KIT	60,50
W2COM6189	REPAIRING KIT 1 (includes: air valve seat set, air valve, air valve spring, fluid needle spring, air valve shaft, fluid adj. guide set, trigger stud, e stopper, needle packing cartridge).	95,50
94011240	FILTER 60 Mesh (250µ)	1,85

BASECOAT

W-400WB2 ClassicPlus

HIGH QUALITY

FEATURES

Perfect surfaces thanks to the Split Nozzle™ technology
VOC-compliant professional spray gun (more than 65% transfer efficiency)
Very fine atomization
Ideal for blending
Low background noise
380 g: one of the most lightweight spray guns on the market
Conical seal nozzle, minimum wear parts
Quality surface for easy cleaning
Clearer design, easy maintenance

SPLIT NOZZLE™
PRE-ATOMIZATION TECHNOLOGY

TECHNICAL DATA	Ø mm	No.	bar	mℓ/min	Nℓ/min	mm
W-400 WB-101G	1.0	WB1	1.8	90	230	230
W-400 WB-121G	1.2			120		260
W-400 WB-131G	1.3			140		280
W-400 WB-141G	1.4			160		290
W-400 WB-122G	1.2	WB2			390	
W-400 WB-132G	1.3					300
W-400 WB-142G	1.4					310
W-400 WB-162G	1.6			250		340

• Air nipple: G1/4" • Fluid nipple: M16 x 1.5mm

Classic plus

ORDER INFORMATION

	ø 1,0	ø 1,2	ø 1,3	ø 1,4	€
W-400 WB1 - PRO KIT	13241411P	13241412P	13241413P	13241414P	418,00
AIR CAP SET (WB1)	93896610				95,00
FLUID NOZZLE + FLUID NEEDLE SET	93626610	93627610	93634610	93628610	121,50

	ø 1,2	ø 1,3	ø 1,4	ø 1,6	€
W-400 WB2 - PRO KIT	13241411P	13241412P	13241417P	13241418P	418,00
AIR CAP SET (WB2)	93624620				95,00
FLUID NOZZLE + FLUID NEEDLE SET	93627610	93634610	93628610	93622620	121,50

PRO KIT - CARTON **BOX**
WS-400 WB Spray Gun
PCG 6 PE CUP - 600 ml
Cleaning Brushes - Universal Spanner

PCG-6-PE
GRAVITY
CUP
600 ml

ANEST IWATA

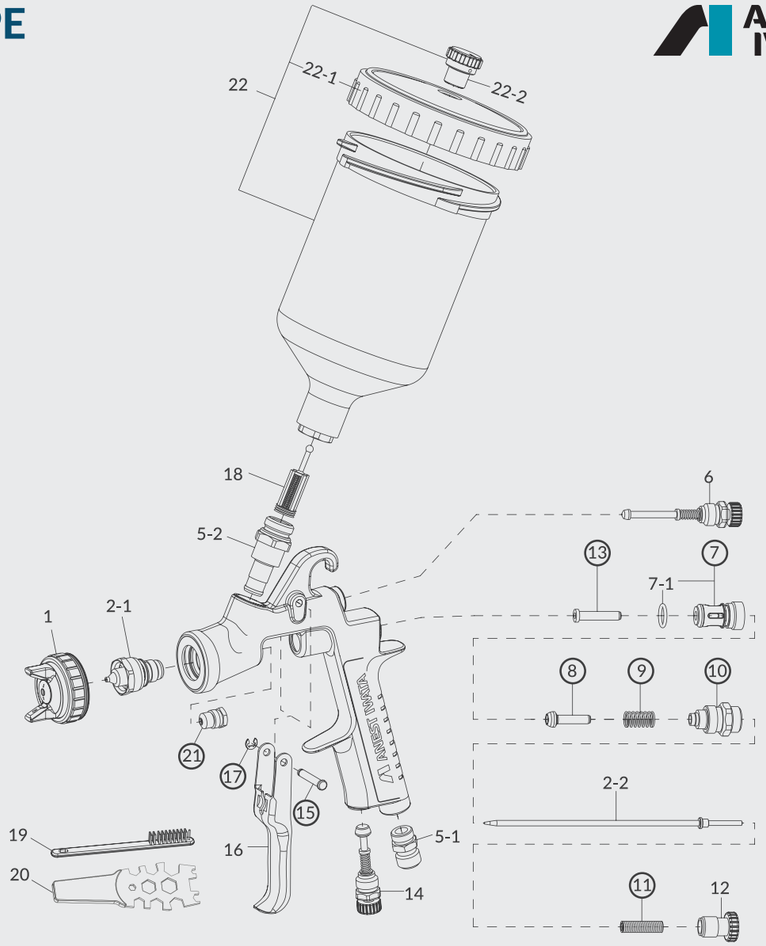

SPARE PARTS

REF.	CODE	DESCRIPTION	QTY.	€
1		AIR CAP SET		95,00
2-1+ 2-2		FLUID NOZZLE + FLUID NEEDLE SET		121,50
5-1	03660300	AIR NIPPLE		9,50
5-2	93650531	FLUID NIPPLE		65,00
6	93842601	PATTERN ADJ. SET		35,00
7	03843530	AIR VALVE SEAT SET		24,00
7-1	06638008	'O' RING		2,50
8	03591530	AIR VALVE		16,50
9	03719530	AIR VALVE SPRING		7,00
10	93844532	FLUID ADJ. GUIDE SET		36,50
11	03593530	FLUID NEEDLE SPRING		7,00
12	93594532	FLUID ADJ. KNOB		14,50
13	93935430	AIR VALVE SHAFT		13,00
14	93845531	AIR ADJ. SET		36,50
15	03667360	TRIGGER STUD		4,00
16	03517600	TRIGGER		17,00
17	03912030	E STOPPER	(2 pcs./1 pk.)	3,50
18	03515500	FILTER 60 Mesh (250µ)		1,85
19	W2COM6163	BRUSHES	5 pcs.	11,00
20	930171A0	UNIVERSAL SPANNER		7,00
21	93810620	NEEDLE PACKING SET		25,85

REF.	CODE	DESCRIPTION	€
22	**14011001**	**PCG-6-PE GRAVITY CUP 600 ml**	51,50
22-1	04002300	LID	9,00
22-2	04003320	NON DRIP	2,00

ACCESSORIES

CODE	DESCRIPTION	€
03708240	AIR CAP PACKING (WHITE)	2,70
03512600	AIR CAP "L" PACKING (BLACK)	4,80
W2KIT55UK	CLEANING KIT	60,50
W2COM6190	REPAIRING KIT 2 (includes: air valve seat set, air valve, air valve spring, fluid needle spring, fluid adj. guide set, air valve shaft, trigger stud, e stopper, needle packing cartridge).	95,50

PRIMER

LPH-300 (LVLP)

PREMIUM QUALITY

FEATURES

High material saving thanks to the LVLP and the Split Nozzle™ technology
Low overspray
Extremely low air supply pressure (1.0 bar - 1.5 bar)
Very low air consumption (200 Nl/min)
Pleasant handling thanks to the lightweight spray gun body
Suitable for wet on wet applications (with 1.4/1.6 mm)
Low background noise
Simple adjustment of the control knobs, for right and left handers
Conical seal nozzle, minimum wear parts
Quality surface for easy cleaning
Clearer design, easy maintenance

SPLIT NOZZLE™
PRE-ATOMIZATION TECHNOLOGY

TECHNICAL DATA	Ø mm	No.	bar	mℓ/min	Nℓ/min	mm
LPH-300 - 104LV	1.0	LV4	1.3	50	240	200
LPH-300 - 124LV	1.2			70		210
LPH-300 - 144LV	1.4			90		250
LPH-300 - 164LV	1.6			110		230
LPH-300 - 184LV	1.8			130		
LPH-300 - 204LV	2.0			150		

• Air Nipple: G1/4" • Fluid Nipple: G1/4"

Further **development** of **HVLP** technology

LVLP

LOW **VOLUME** **LOW** PRESSURE

ORDER INFORMATION

	ø 1,0	ø 1,2	ø 1,4	€
LPH-300 - PRO KIT (600 ml CUP)	13189063P	13189003P	13189034P	332,50
LPH-300 - PRO KIT (200 ml CUP)	13189061P	13189001P	13189011P	332,50
AIR CAP SET (LV4)	93875602			117,50
FLUID NOZZLE + FLUID NEEDLE SET	93518650	93867600	93862600	140,00

	ø 1,6	ø 1,8	ø 2,0	€
LPH-300 - PRO KIT (600 ml CUP)	13189023P	13189033P	13189035P	332,50
LPH-300 - PRO KIT (200 ml CUP)	13189021P	-	-	332,50
AIR CAP SET (LV4)	93875602			117,50
FLUID NOZZLE + FLUID NEEDLE SET	93869600	93871600	93621600	140,00

PRO KIT - CARTON BOX
LPH-300 Spray Gun
PC-G600P-2 CUP - 600 ml
Cleaning Brushes
Universal Spanner

PRO KIT - CARTON BOX
LPH-300 Spray Gun
PCG 2P-2 CUP - 200 ml
Cleaning Brushes - Universal Spanner

ANEST IWATA

LPH-300 (LVLP)

FILTER CUP
PROPER ADJUSTMENT

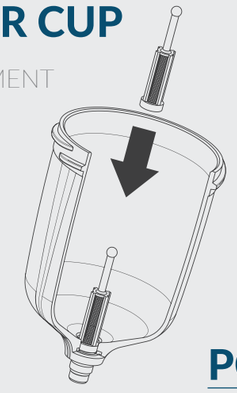

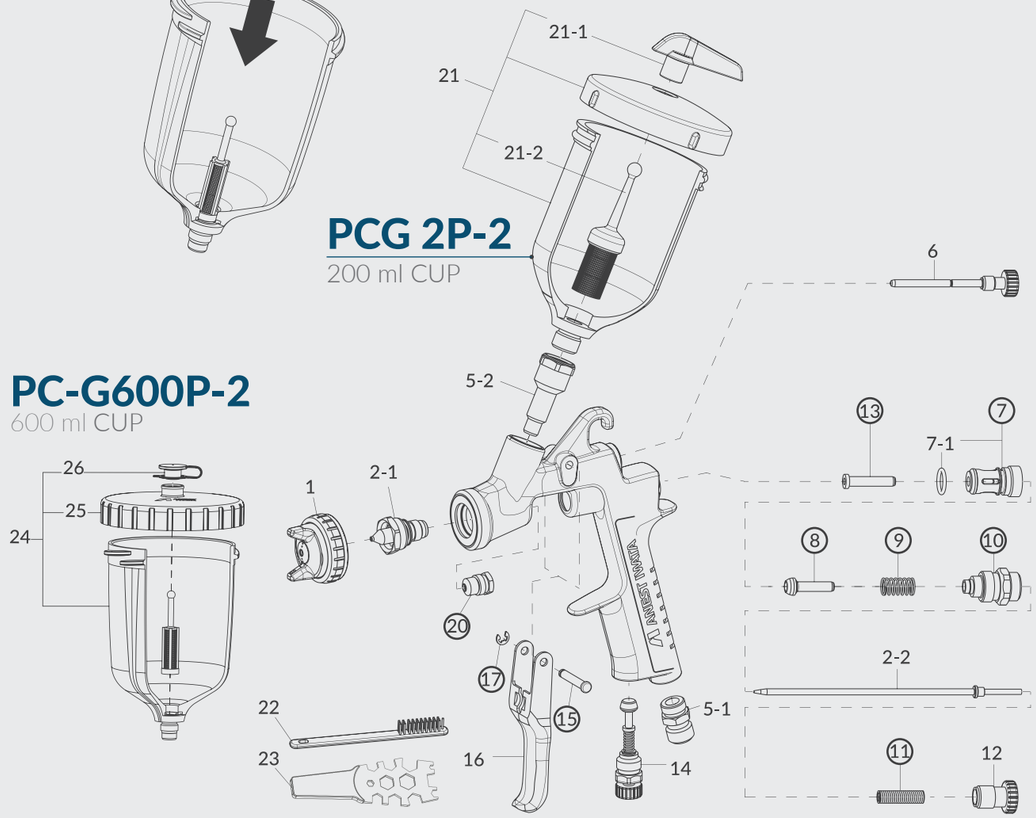

SPARE PARTS

REF.	CODE	DESCRIPTION	QTY.	€
1		AIR CAP SET		117,50
2-1+ 2-2		FLUID NOZZLE + FLUID NEEDLE SET		140,00
5-1	03660300	AIR NIPPLE		9,50
5-2	03575620	FLUID NIPPLE		96,00
6	03577620	PATTERN ADJ. SET		49,00
7	03843530	AIR VALVE SEAT SET		24,00
7-1	06638008	'O' RING		2,50
8	03591530	AIR VALVE		16,50
9	03719530	AIR VALVE SPRING		7,00
10	93844532	FLUID ADJ. GUIDE SET		36,50
11	03593530	FLUID NEEDLE SPRING		7,00
12	93594532	FLUID ADJ. KNOB		14,50
13	93935430	AIR VALVE SHAFT		13,00
14	93845531	AIR ADJ. SET		36,50
15	03667360	TRIGGER STUD		4,00
16	03597530	TRIGGER		14,50
17	03912030	E STOPPER	(2 pcs./1 pk.)	3,50
20	93810620	NEEDLE PACKING SET		25,85

REF.	CODE	DESCRIPTION	€
22	W2COM6163	BRUSHES (5 pcs./1 pk.)	11,00
23	930171A0	UNIVERSAL SPANNER	7,00
21	**W0CUPAZ40IN**	**PCG-2P-2 GRAVITY CUP 200 ml**	35,00
21-1	W2KIT07	NON DRIP SET (5 pcs./1pk.)	6,00
21-2	W2KIT06	FILTER 50 Mesh (297µ) (5 pcs./1pk.)	19,00
24	**14019100**	**PC-G600P-2 GRAVITY CUP 600 ml**	56,50
25	94011220	LID (for 600 ml cup)	31,00
26	94011230	NON DRIP (for 600 ml cup)	1,60

ACCESSORIES

CODE	DESCRIPTION	€
03608320	AIR CAP PACKING (WHITE)	4,20
03576530	AIR CAP "L" PACKING (BLACK)	4,20
W2KIT55UK	CLEANING KIT	60,50
W2COM6190	REPAIRING KIT 2 (includes: air valve seat set, air valve, air valve spring, fluid needle spring, air valve shaft, fluid adj. guide set, trigger stud, e stopper, needle packing cartridge).	95,50
94011240	FILTER 60 Mesh (250µ)	1,85

PRIMER

W-400 BELLARIA ClassicPlus

HIGH QUALITY

FEATURES

High quality filler spray gun

Perfect surfaces obtained with the Flat & Thin™ technology

Only 250/270 l/min of air consumption, gives to the sprayer an excellent painting control

Stable, large and compact spray pattern

VOC-compliant professional spray gun (more than 65% transfer efficiency)

Low background noise

Conical seal nozzle, minimum wear parts

Quality surface for easy cleaning

Clearer design, easy maintenance

TECHNICAL DATA	Ø mm	No.	bar	mℓ/min	Nℓ/min	mm
W-400 WB-104G	1.0	BA4-1	2.0	130	250	200
W-400 WB-124G	1.2			180		220
W-400 WB-134G	1.3			220	270	280
W-400 WB-144G	1.4			250		300
W-400 WB-164G	1.6	BA4-2		285		330
W-400 WB-184G	1.8			360		375
W-400 WB-204G	2.0			375		390

• Air nipple: G1/4" • Fluid nipple: M16 x 1.5mm

Classic plus

BellAria

ORDER INFORMATION

	ø 1,0	ø 1,2	ø 1,3	ø 1,4	€
W-400 Bellaria - PRO KIT	13328511P	13328512P	13328513P	13328514P	362,50
AIR CAP SET (BA4-1)	93611700		-		95,00
AIR CAP SET (BA4-2)	-		93611710		95,00
FLUID NOZZLE + FLUID NEEDLE SET	93611720	93611730	93611740	93611750	97,50

	ø 1,6	ø 1,8	ø 2,0	-	€
W-400 Bellaria - PRO KIT	13328516P	13328518P	13328519P	-	362,50
AIR CAP SET (BA4-2)	93611710			-	95,00
FLUID NOZZLE + FLUID NEEDLE SET	93611760	93611770	93611780	-	97,50

PRO KIT - CARTON **BOX**

WS-400 Bellaria Spray Gun
PCG 6 PE CUP - 600 ml
Cleaning Brushes - Universal Spanner

PCG-6 PE

GRAVITY
CUP
600 ml

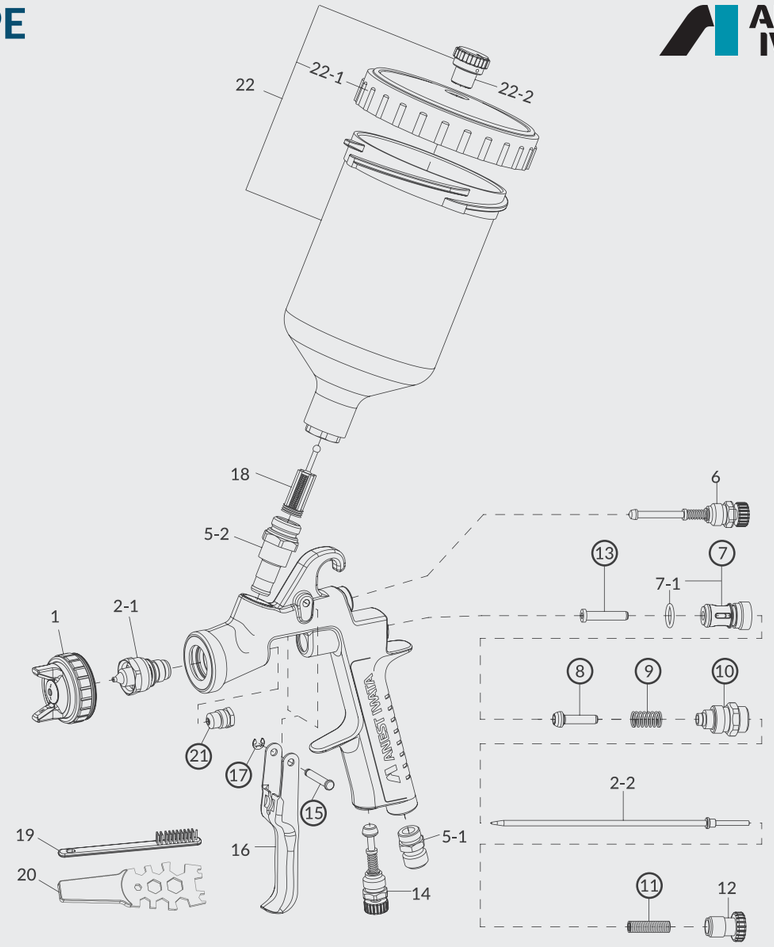

SPARE PARTS

REF.	CODE	DESCRIPTION	QTY.	€
1		AIR CAP SET		95,00
2-1+ 2-2		FLUID NOZZLE + FLUID NEEDLE SET		97,50
5-1	03660300	AIR NIPPLE		9,50
5-2	93650531	FLUID NIPPLE		65,00
6	93611930	PATTERN ADJ. SET		39,00
7	03843530	AIR VALVE SEAT SET		24,00
7-1	06638008	'O' RING		2,50
8	03591530	AIR VALVE		16,50
9	03719530	AIR VALVE SPRING		7,00
10	93844532	FLUID ADJ. GUIDE SET		36,50
11	03593530	FLUID NEEDLE SPRING		7,00
12	93611900	FLUID ADJ. KNOB		14,50
13	93935430	AIR VALVE SHAFT		13,00
14	93611940	AIR ADJ. SET		36,50
15	03667360	TRIGGER STUD		4,00
16	03517600	TRIGGER		17,00
17	03912030	E STOPPER	(2 pcs./1 pk.)	3,50
18	03515500	FILTER 60 Mesh (250µ)		1,85
21	93810620	NEEDLE PACKING SET		25,85
19	W2COM6163	BRUSHES	(5 pcs./1 pk.)	11,00
20	930171A0	UNIVERSAL SPANNER		7,00

REF.	CODE	DESCRIPTION	€
22	**14011001**	**PCG-6-PE GRAVITY CUP 600 ml**	51,50
22-1	04002300	LID	9,00
22-2	04003320	NON DRIP	2,00

ACCESSORIES

CODE	DESCRIPTION	€
03708240	AIR CAP PACKING (WHITE)	2,70
03512600	AIR CAP "L" PACKING (BLACK)	4,80
W2KIT55UK	CLEANING KIT	60,50
W2COM6190	REPAIRING KIT 2 (includes: air valve seat set, air valve, air valve spring, fluid needle spring, fluid adj. guide set, air valve shaft, trigger stud, e stopper, needle packing cartridge).	95,50

PRIMER

AZ3 HTE-S Impact

STANDARD QUALITY

FEATURES

High quality filler spray gun
Flat & Thin™ spray pattern with fine atomization
All fluid passages are in stainless steel
Trigger easy to dose
Simple operation of the control knobs, for right and left handers
Costs for spare parts replacement extremely customer friendly

BLACK VERSION

HOMOGENEOUS and FINE **ATOMIZATION**

HTE-S IMPACT - High Performance Spray Technology

HTE HIGH TRANSFER EFFICIENCY

TECHNICAL DATA	Ø mm	No.	bar	mℓ/min	Nℓ/min	mm
AZ3 HTE-S IMPACT	1.2	HTE-S1	2.0	240	325	190
	1.3			265		210
	1.4			279		230
	1.6	HTE-S2		289	312	
	1.8			322		250
	2.0			361		270

• Air nipple: G1/4" • Fluid nipple: G1/4"

CHROMED VERSION

CARTON **BOX**
AZ3 HTE-S Impact Spray Gun
PCG-6P-2 AZ CUP - 600 ml
Universal Spanner

ORDER INFORMATION

	ø 1,2	ø 1,3	ø 1,4	€
AZ3 HTE-S IMPACT - Black Version	W0SPG90AG12C	W0SPG90AG13C	W0SPG90AG14C	179,00
AZ3 HTE-S IMPACT - Chrome Version	W0SPG91AG12C	W0SPG91AG13C	W0SPG91AG14C	179,00
AIR CAP SET (HTE-S1)	W2CAP90AG12			51,50
FLUID NOZZLE + FLUID NEEDLE SET	W2ADU90AG12	W2ADU90AG13	W2ADU90AG14	35,00

	ø 1,6	ø 1,8	ø 2,0	€
AZ3 HTE-S IMPACT - Black Version	W0SPG90AG16C	W0SPG90AG18C	W0SPG90AG20C	179,00
AZ3 HTE-S IMPACT - Chrome Version	W0SPG91AG16C	W0SPG91AG18C	W0SPG91AG20C	179,00
AIR CAP SET (HTE-S2)	W2CAP90AG16			51,50
FLUID NOZZLE + FLUID NEEDLE SET	W2ADU90AG16	W2ADU90AG18	W2ADU90AG20	35,00

PCG-6P-2-AZ

GRAVITY
CUP
600 ml

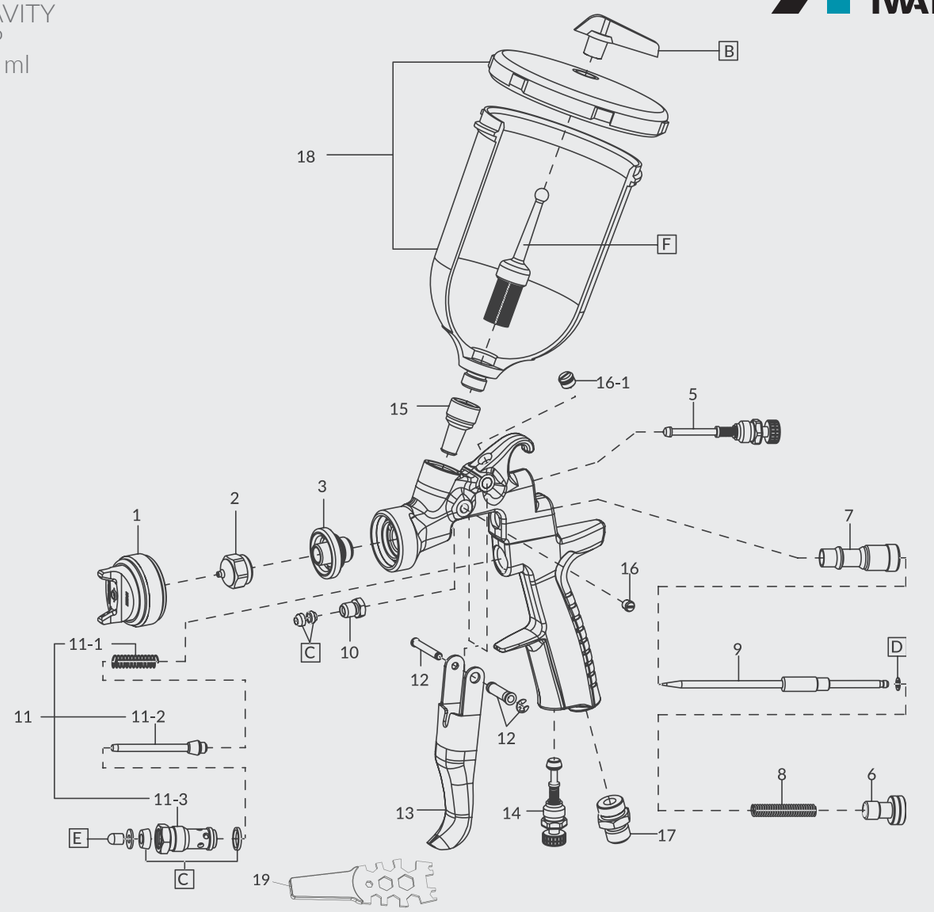

SPARE **PARTS**

REF.	CODE	DESCRIPTION	QTY.	€
1		AIR CAP SET		51,50
2+9		FLUID NOZZLE + FLUID NEEDLE SET		35,00
3	W3COM3050	NOZZLE HOLDER		24,50
5	93842601	PATTERN ADJ. SET		35,00
6	W2COM6077	FLUID NEEDLE ADJ. KNOB		3,00
7	W2010140900	FLUID NEEDLE GUIDE		3,00
8	W2010140800	FLUID NEEDLE SPRING		2,00
10	W2010140600	FLUID NEEDLE PACKING NUT		3,00
11	W2COM6080	AIR VALVE SET		9,50
11-1	W2010141700	AIR VALVE SPRING		1,50
11-2	W2010130600	AIR VALVE		2,50
11-3	W2010130500	AIR VALVE SEAT		4,50
12	W2COM4041	TRIGGER STUD		4,00
13	W2COM6051	TRIGGER		5,50
14	93845531	AIR ADJ. SET		36,50
15	W3COM5038	THREADED BUSHING		12,50
16	W2COM5004	SCREW		0,50
16-1	W2COM6050	PLUG		1,50
17	W2COM5039	AIR NIPPLE		4,00
C	W2KIT56	PACKING SET	(3 pcs./1 pk.)	4,50
D	W2KIT33	SLIDE RING SET	(10 pcs./1 pk.)	10,00
E	W2KIT37	AIR VALVE SHAFT TIP SET	(5 pcs./1 pk.)	4,00

REF.	CODE	DESCRIPTION	€
18	W0CUPAZ90	PCG-6P-2-AZ GRAVITY CUP 600 ml	36,00
B	W2KIT07	NON DRIP SET (5 pcs./1 pk.)	6,00
F	W2KIT06	FILTER SET 50 MESH (297µ) (5 pcs./1 pk.)	19,00
	W2KIT55UK	CLEANING KIT	60,50
19	930171A0	UNIVERSAL SPANNER	7,00

SPRAY PUTTY

Air Gunsa ANEST IWATA Group

AZ3 HTE2 HVLP

STANDARD QUALITY

FEATURES

Robust spray gun for materials with high viscosity

Trigger easy to dose

Simple operation of the control knobs, for right and left handers

Costs for spare parts replacement extremely customer friendly

HTE HIGH TRANSFER EFFICIENCY

HVLP
HIGH **VOLUME**
LOW PRESSURE
TECHNOLOGY

TECHNICAL DATA	Ø mm	No.	bar	mℓ/min	Nℓ/min	mm
AZ3 HTE2 AV HVLP	2.0	HVLP	2.0	240	340	360

• Air nipple: G1/4" • Fluid nipple: G1/4"

IPA

SPECIAL **WRENCH**
ACCESSORIES

ORDER INFORMATION

CARTON **BOX**
AZ3 HTE2 HVLP Spray Gun
PCG-6P-2B AZ CUP - 600 ml

	ø 2,0	€
AZ3 HTE2 HVLP with 600 ml CUP	W0SPG85AG20C	153,50
AIR CAP SET (HVLP)	W2CAP84AG	39,50
FLUID NOZZLE + FLUID NEEDLE SET	W2013031300	21,50

PCG-6B 2B-AZ
GRAVITY
CUP
600 ml

ANEST IWATA

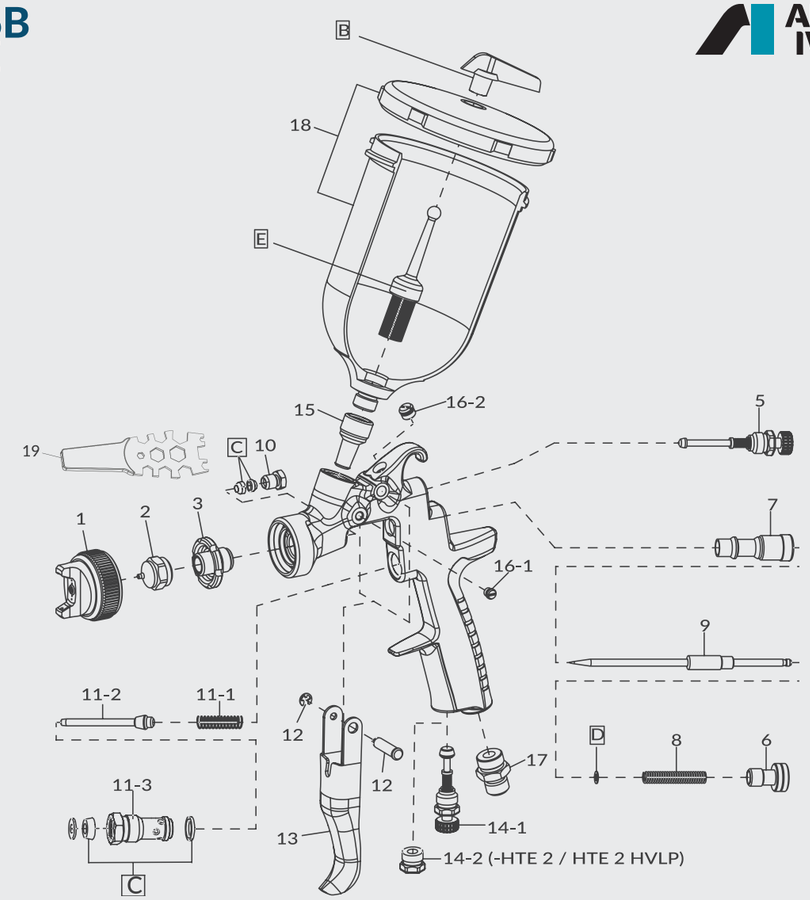

SPARE **PARTS**

REF.	CODE	DESCRIPTION	QTY.	€
1		AIR CAP SET		39,50
2+9		FLUID NOZZLE + NEEDLE SET		21,50
3	W2010140200	NOZZLE HOLDER		7,00
5	93842601	PATTERN ADJ. SET		35,00
6	W2010141000	FLUID NEEDLE ADJ. KNOB		2,00
7	W2010140900	FLUID NEEDLE GUIDE		3,00
8	W2010140800	FLUID NEEDLE SPRING		2,00
10	W2010140600	FLUID NEEDLE PACKING NUT		3,00
11	W2010120100	AIR VALVE SET		8,00
11-1	W2010141700	AIR VALVE SPRING		1,50
11-2	W2010130600	AIR VALVE		2,50
11-3	W2010130500	AIR VALVE SEAT		4,50
12	W2COM4001	TRIGGER STUD		3,50
13	W2COM6051	TRIGGER		5,50
14-1	93845531	AIR ADJ. SET		36,50
14-2	93625370	PLUG		23,00
15	W2013040100	THREADED BUSHING		2,00
16-1	W2COM5004	SCREW		0,50
16-2	W2COM6050	PLUG		1,50
17	W2COM5000	AIR NIPPLE		3,00
C	W2KIT56	PACKING SET	(3 pcs./1 pk.)	4,50
D	W2KIT33	SLIDE RING SET	(10 pcs./1 pk.)	10,00

REF.	CODE	DESCRIPTION	€
18	W0012820100	PCG-6P-2B-AZ GRAVITY CUP 600 ml	13,50
B	W2KIT07	NON DRIP SET (5 pcs./1 pk.)	6,00
E	W2KIT06	FILTER SET 50 Mesh (297µ) (5 pcs./1 pk.)	19,00
19	930171A0	UNIVERSAL SPANNER	7,00

ACCESSORIES

CODE	DESCRIPTION	€
W2KIT55UK	CLEANING KIT	60,50
VPACAZ3H2	BLACK PLASTIC CASE (for 1 SPRAY GUN and 1 CUP)	40,00
W2503500100	SPECIAL WRENCH	41,50

SPRAY PUTTY

Air Gunsa ANEST IWATA Group

AZ3 HTE P.A.S. Concept

STANDARD QUALITY

FEATURES

Robust spray gun with pressurized cup most suitable for high viscosity materials
Large, uniform spray pattern also with high viscosity materials, thanks to the Pressure Assisted System (P.A.S.)
Costs for spare parts replacement extremely customer friendly
High material transfer rate
All fluid passages are in stainless steel
Precise mini-controller for cup pressure
Trigger easy to dose

HTE-P1 CONCEPT

HIGH PERFORMANCE SPRAY TECHNOLOGY

TECHNICAL DATA	Ø mm	No.	bar	mℓ/min	Nℓ/min	mm
AZ3 HTE P.A.S. CONCEPT	1.3	HTE-P1 CONCEPT	2.5	190	286	270
	1.5			260		320
	1.8			396		380
	2.0			410		400

• Air nipple: G1/4" • Fluid nipple: G1/4"

Concept AZ3 HTE P.A.S.

Flat and Long Pattern
even spraying
heavy materials

METAL LID

Sturdy
and resistant
for heavy
duty use

PRESSURE Assisted System

HIGH PRECISION

MINI
PRESSURE
REGULATOR

ORDER INFORMATION

CARTON BOX

AZ3 HTE P.A.S. Concept Spray Gun
PCGP-6P-2P-AZ PRESSURIZED CUP - 600 ml
Universal Spanner

	ø 1,3	ø 1,5	ø 1,8	ø 2,0	€
AZ3 HTE P.A.S.	W0SPG88AG13C	W0SPG88AG15C	W0SPG88AG18C	W0SPG88AG20C	283,00
AIR CAP SET (HTE-P1 CONCEPT)	W2CAP83AG13				51,50
FLUID NOZZLE + FLUID NEEDLE SET	W2ADU83AG13	W2ADU83AG15	W2ADU83AG18	W2ADU83AG20	35,00

PCGP-6P 2B-AZ

PRESSURIZED
CUP
600 ml

ANEST IWATA

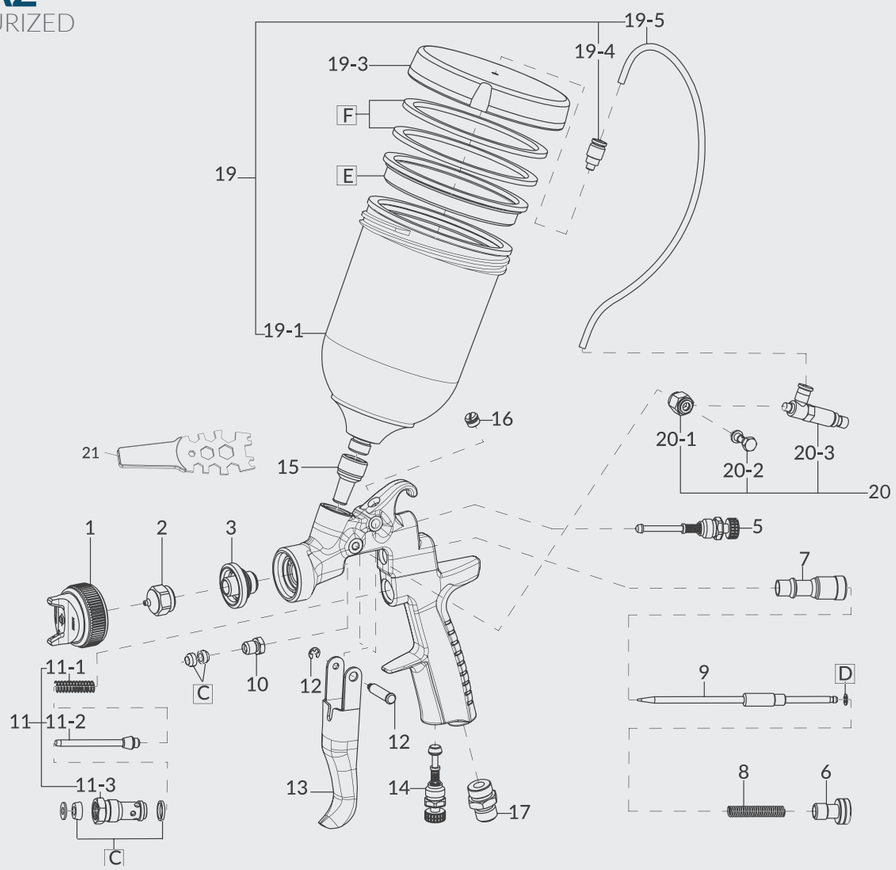

SPARE PARTS

REF.	CODE	DESCRIPTION	QTY.	€
1		AIR CAP SET		51,50
2+9		NOZZLE + NEEDLE SET		35,00
3	W3COM3050	NOZZLE HOLDER		24,50
5	93842601	PATTERN ADJ. SET		35,00
6	W2010141000	FLUID NEEDLE ADJ. KNOB		2,00
7	W2010140900	FLUID NEEDLE GUIDE		3,00
8	W2010140800	FLUID NEEDLE SPRING		2,00
10	W2010140600	FLUID NEEDLE PACKING NUT		3,00
11	W2010120100	AIR VALVE SET		8,00
11-1	W2010141700	AIR VALVE SPRING		1,50
11-2	W2010130600	AIR VALVE		2,50
11-3	W2010130500	AIR VALVE SEAT		4,50
12	W2COM4001	TRIGGER STUD		3,50
13	W2COM6051	TRIGGER		5,50
14	93845531	AIR ADJ. SET		36,50
15	W3COM5038	THREADED BUSHING		12,50
16	W2COM6050	PLUG		1,50
17	W2COM5000	AIR NIPPLE		3,00
C	W2KIT56	PACKING SET	(3 pcs./1 pk.)	4,50
D	W2KIT33	SLIDE RING SET	(10 pcs./1 pk.)	10,00

REF.	CODE	DESCRIPTION	€
19	W0CUPAZ85	PCGP-6P-2B-AZ PRESSURIZED CUP 600 ml	94,50
19-1	W3COM1037	PRESSURE CUP	40,00
19-3	W3COM1031	LID	46,00
19-4	W3COM5041	STRAIGHT MALE ADAPTOR	4,50
19-5	0010002700	AIR HOSE	2,50
E	W2KIT38	NON DRIP SET (3 pcs.)	5,00
F	W2KIT39	LID PACKING SET (4 pcs.)	6,50
20	W2SUB6066	PRESSURE REGULATOR SET	49,00
20-1	W3COM4030	ORIENTING RING	2,50
20-2	W3COM4033	BANJO STEM SINGLE	2,00
20-3	W3COM5032	PRESSURE REGULATOR	41,00
21	930171A0	UNIVERSAL SPANNER	7,00

ACCESSORIES

CODE	DESCRIPTION	€
W2KIT55UK	CLEANING KIT	60,50

SMART REPAIR

W-300 WB PREMIUM QUALITY

SPLIT NOZZLE™
PRE-ATOMIZATION TECHNOLOGY

TECHNICAL DATA	Ø mm	No.	bar	mℓ/min	Nℓ/min	mm
W-300 WB - 101G	1.0	WB1	1.5	65	190	230
W-300 WB - 121G	1.2			100		240
W-300 WB - 141G	1.4			125		250

• Air Nipple: G1/4" • Fluid Nipple: G1/4"

ORDER INFORMATION

	ø 1,0	ø 1,2	ø 1,4	€
W-300 WB - PRO KIT (600 ml CUP)	13241518P	13241528P	13241508P	355,50
W-300 WB - PRO KIT (200 ml CUP)	13241515P	13241525P	13241505P	355,50
AIR CAP SET (WB1)	93592621			96,50
FLUID NOZZLE + FLUID NEEDLE SET	93602620	93591620	93595620	122,50

W-300 STANDARD QUALITY

TECHNICAL DATA	Ø mm	No.	bar	mℓ/min	Nℓ/min	mm
W-300-081G	0.8	E1	2.5	60	80	100
W-300-101G	1.0	K1		100	145	130
W-300-104G	1.0	H4				
W-300-132G	1.3	H2		160	225	175

• Air Nipple: G1/4" • Fluid Nipple: G1/4"

ORDER INFORMATION

	ø 0,8	ø 1,0	ø 1,0	ø 1,3	€
W-300 PRO KIT (600 ml CUP)	13241828P	13241818P	13241819P	13241808P	272,00
AIR CAP SET	E1 93689610	-	-	-	85,00
AIR CAP SET	-	-	-	H2 93696610	85,00
AIR CAP SET	-	K1 93735610	H4 93662610	-	85,00
FLUID NOZZLE + FLUID NEEDLE SET	93590621	93600621	93600621	-	112,00
FLUID NOZZLE + FLUID NEEDLE SET	-	-	-	93666610P	83,50

CARTON BOX

PRO KIT - with 600 ml CUP
W-300 WB or W-300 Spray Gun
PC-G600P-2 CUP - 600 ml
Cleaning Brushes - Universal Spanner

PRO KIT - with 200 ml CUP
W-300 WB Spray Gun
PCG 2P-2 CUP - 200ml
Cleaning Brushes - Universal Spanner

FEATURES

- Perfect surfaces thanks to the Split Nozzle™ technology
- Specific for blending, for example for side walls, bumper and smaller areas
- Barely visible transitions thanks to the soft and fine spray pattern
- Very fine atomization with low air consumption (190 l/min)
- Extremely low material consumption
- Low background noise
- 320 g: one of the most lightweight Smart Repair spray guns on the market
- Simple operation of the control knobs, for right and left handers
- Conical seal nozzle, minimum wear parts
- Clearer design, easy maintenance
- Quality surface for easy cleaning

PCG-2P-2
CUP 200 ml

PC-G600P-2
CUP 600 ml

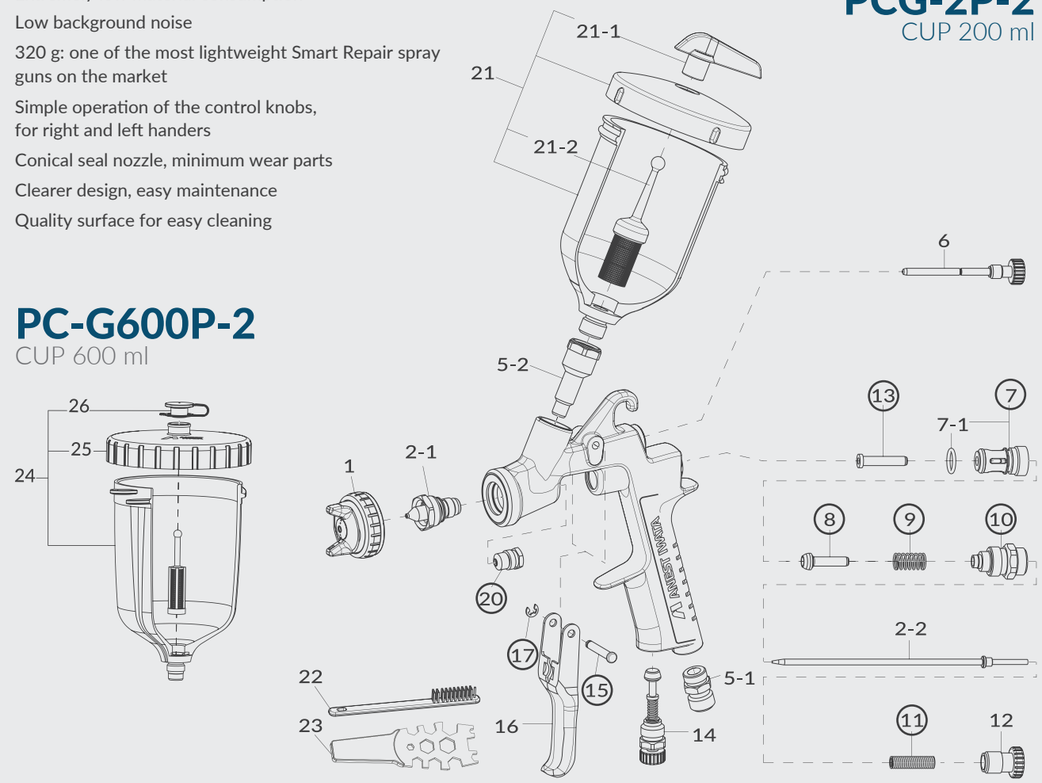

SPARE PARTS

REF.	CODE	DESCRIPTION	QTY.	€
5-1	03660300	AIR NIPPLE		9,50
5-2	03575620	FLUID NIPPLE		96,00
6	03577620	PATTERN ADJ. SET		49,00
7	03843530	AIR VALVE SEAT SET		24,00
7-1	06638008	'O'RING		2,50
8	03591530	AIR VALVE		16,50
9	03719530	AIR VALVE SPRING		7,00
10	93844532	FLUID ADJ. GUIDE SET		36,50
11	03593530	FLUID NEEDLE SPRING		7,00
12	93594532	FLUID ADJ. KNOB		14,50
13	93935430	AIR VALVE SHAFT		13,00
14	93845531	AIR ADJ. SET		36,50
15	03667360	TRIGGER STUD		4,00
16	03597530	TRIGGER		14,50
17	03912030	E STOPPER	(2 pcs./1 pk.)	3,50
20	93810620	NEEDLE PACKING SET		25,85
22	W2COM6163	BRUSHES	(5 pcs./1 pk.)	11,00
23	930171A0	UNIVERSAL SPANNER		7,00

REF.	CODE	DESCRIPTION	€
21	W0CUPAZ40IN	PCG-2P-2 GRAVITY CUP 200 ml	35,00
21-1	W2KIT07	NON DRIP SET (5 pcs./1pk.)	6,00
21-2	W2KIT06	FILTER 50 Mesh (297µ) (5 pcs./1pk.)	19,00
24	14019100	PC-G600P-2 GRAVITY CUP 600 ml	56,50
25	94011220	LID (for 600 ml cup)	31,00
26	94011230	NON DRIP (for 600 ml cup)	1,60

ACCESSORIES

CODE	DESCRIPTION	€
03608320	AIR CAP PACKING (WHITE)	4,20
03576530	AIR CAP "L" PACKING (BLACK)	4,20
W2KIT55UK	CLEANING KIT	60,50
W2COM6190	REPAIRING KIT 2 (includes: air valve seat set, air valve, air valve spring, fluid needle spring, air valve shaft, fluid adj. guide set, trigger stud, e stopper, needle packing cartridge).	95,50
94011240	FILTER 60 Mesh (250µ)	1,85

SMART REPAIR

W-300WB **UV** Cured Paints

THE W-300 WB UV IS THE LATEST ADDITION TO OUR W-300 SERIES

As the W-300 series is already known for its superior atomization, we have added some very specific features to our 1.2 nozzle size to make it a dedicated specialist for UV paint application. It comes with a black colored 200 ml cup that prevents UV ray exposition of the paint and for extra convenience we have added an Air Cap Cover to protect the area around the nozzle. This prevents remaining paint on the nozzle or air cap from curing while the spray gun is not in use, making it's usage and cleaning as effortless as possible. Although the black cup characterizes the visual appearance of the spray gun already we have added several other black details and an additional engraving to make recognizing it even easier.

FEATURES

Specific for UV cured paints
Black UV Paint Cup: 200 ml
Black Air Cap Cover to prevent paint from drying
A very fine atomization even at a low air inlet pressure
Higher-transfer efficiency
Lower air consumption & less overspray
The spray pattern is large, uniform, flat, soft

SPLIT NOZZLE™
PRE-ATOMIZATION TECHNOLOGY

TECHNICAL DATA	Ø mm	No.	bar	mℓ/min	Nℓ/min	mm
W-300 WB 121G	1.2	WB1	1.5	100	190	240

• Air Nipple: G1/4" • Fluid Nipple: G1/4"

ORDER INFORMATION

PRO KIT - CARTON BOX

W-300 WB UV Spray Gun
PCG-2P-2-S1 CUP - 200 ml Black Gravity Cup
Cleaning Brushes - Universal Spanner

	ø 1,2	€
W-300 WB UV - PRO KIT (200 ml CUP)	130068A0	387,30
AIR CAP SET (WB1)	930149A0	101,00
FLUID NOZZLE + FLUID NEEDLE SET	93591620	121,70

AIR CAP PROTECTION

ANEST IWATA

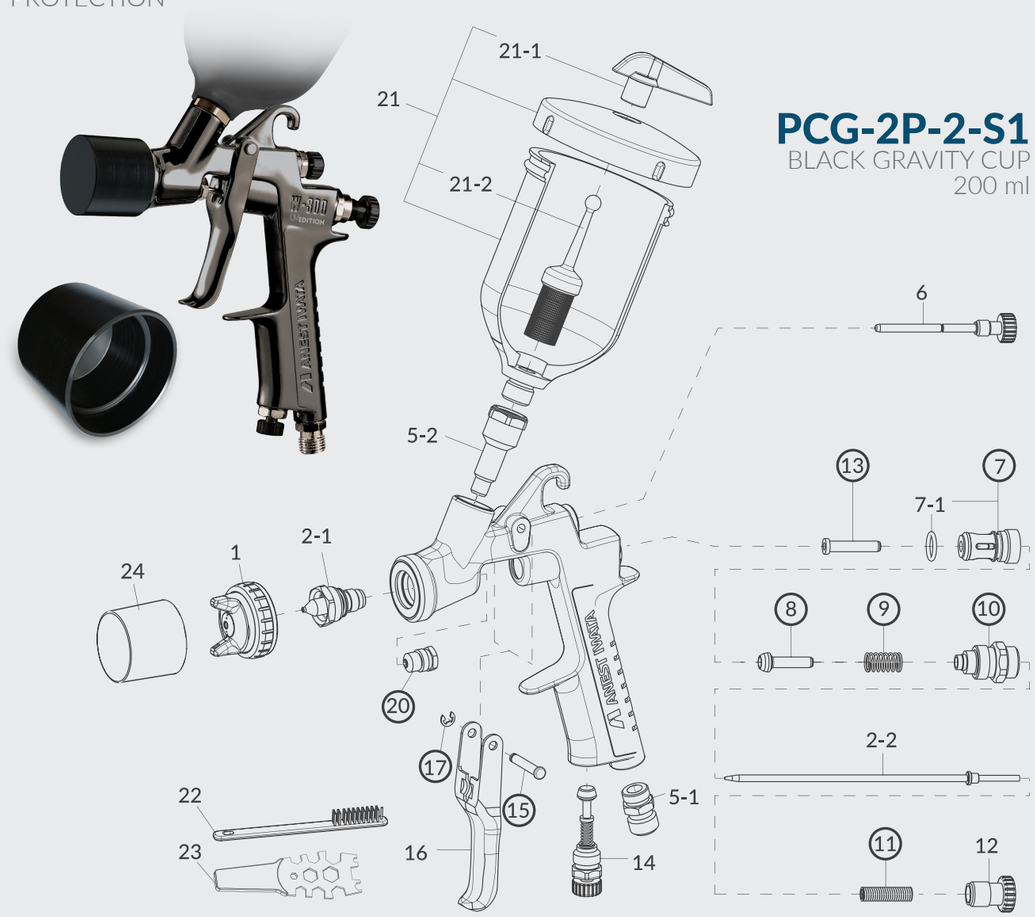

PCG-2P-2-S1
BLACK GRAVITY CUP
200 ml

SPARE PARTS

REF.	CODE	DESCRIPTION	QTY.	€
5-1	03660300	AIR NIPPLE		9,50
5-2	03575620	FLUID NIPPLE		96,00
6	930151A0	PATTERN ADJ. SET		47,50
7	03843530	AIR VALVE SEAT SET		24,00
7-1	06638008	'O'RING		2,50
8	03591530	AIR VALVE		16,50
9	03719530	AIR VALVE SPRING		7,00
10	93844532	FLUID ADJ. GUIDE SET		36,50
11	03593530	FLUID NEEDLE SPRING		7,00
12	930150A0	FLUID ADJ. KNOB		16,00
13	93935430	AIR VALVE SHAFT		13,00
14	930152A0	AIR ADJ. SET		37,50
15	03667360	TRIGGER STUD		4,00
16	930197A0	TRIGGER		15,50
17	03912030	E STOPPER	(2 pcs./1 pk.)	3,50
20	93810620	NEEDLE PACKING SET		25,85
22	W2COM6163	BRUSHES	(5 pcs./1 pk.)	11,00
23	930171A0	UNIVERSAL SPANNER		7,00

REF.	CODE	DESCRIPTION	€
21	140025A0	**PCG-2P-2-S1 BLACK GRAVITY CUP 200 ml with Fluid Joint in INOX**	32,00
21-1	W2KIT07	NON DRIP SET (5 pcs./1pk.)	6,00
21-2	W2KIT06	FILTER 50 Mesh (297µ) (5 pcs./1pk.)	19,00
24	930147A0	AIR CAP PROTECTION	16,00

ACCESSORIES

CODE	DESCRIPTION	€
03608320	AIR CAP PACKING (WHITE)	4,20
03576530	AIR CAP "L" PACKING (BLACK)	4,20
W2KIT55UK	CLEANING KIT	60,50
W2COM6190	REPAIRING KIT 2 (includes: air valve seat set, air valve, air valve spring, fluid needle spring, air valve shaft, fluid adj. guide set, trigger stud, e stopper, needle packing cartridge).	95,50
94011240	FILTER 60 Mesh (250µ)	1,85

SPOT & SMART REPAIR

AZ4 HTE-S **Impact Junior**

STANDARD QUALITY

This version has been designed to achieve those small and medium repairs on a vehicle body, which can be perfectly repaired thanks to the high transfer-efficiency and the more control that this spray gun grants, together with the maximum comfort for the operator. Ideal for both water and solvent based paints, it is provided with an adjustable inlet valve and it is available both with a 200 ml or a 70 ml cup.

200 ml Gravity **CUP**

FEATURES

- Flat and even fan pattern: excellent colour reproduction and mottle free control
- Low pressure properties: atomizes at low pressures to keep repair small
- Double tapered seat nozzle system: nozzle thread has no contact with paint so it is easy to keep clean
- PTFE coated black gun body: appealing design and ease of cleaning and maintenance
- Ergonomic design redesigned for maximum balance and comfort
- Smooth trigger action: perfect spot repair control
- Most parts interchangeable with AZ3 HTE2: cost saving on spares

70 ml Gravity **CUP**

HIGH PERFORMANCE SPRAY **TECHNOLOGY**

TECHNICAL DATA	Ø mm	No.	bar	mℓ/min	Nℓ/min	mm
AZ4 HTE-S	0.8	AZ4-1	1.0	50	105	120
	1.0			65		150
	1.2			80		160
	1.3	AZ4-2	2.5	140	235	150

• Air nipple: G1/4" • Fluid nipple: G1/4"

ORDER INFORMATION

CARTON **BOX**
AZ4 HTE-S Spray Gun
PCG-2P-2 CUP - 200 ml

CARTON **BOX**
AZ4 HTE-S Spray Gun
PCG-1P-2 - 70 ml

	ø 0,8	ø 1,0	ø 1,2	ø 1,3	€
AZ4 HTE-S with 200 ml CUP	13000710	13000720	13000730	13000740	109,00
AZ4 HTE-S with 70 ml CUP	13001130	13001140	13001150	-	109,00
AIR CAP SET (AZ4-1)	93003740			93003750	31,50
FLUID NOZZLE + FLUID NEEDLE SET	93004580	93004590	93004600	93004610	21,50

PCG-1P-2
GRAVITY
CUP
70 ml

PCG-2P-2
GRAVITY
CUP
200 ml

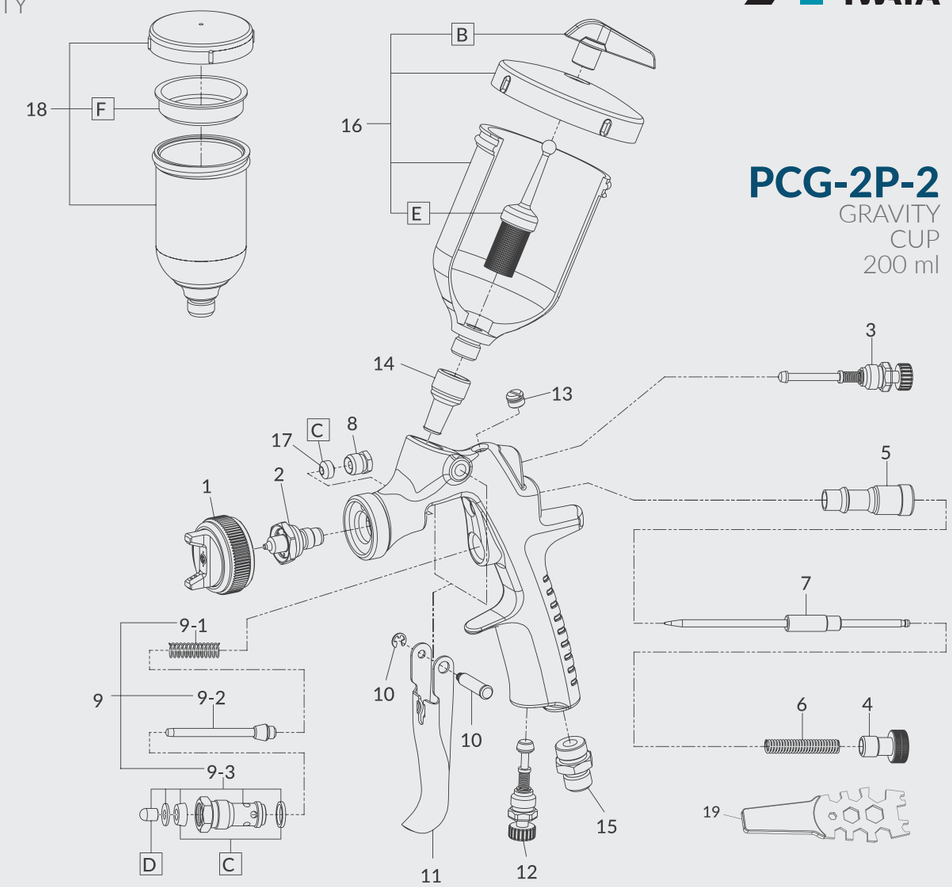

SPARE **PARTS**

REF.	CODE	DESCRIPTION	QTY.	€
1		AIR CAP SET		31,50
10+11		FLUID NOZZLE + NEEDLE SET		21,50
3	93842601	PATTERN ADJUSTMENT SET		35,00
4	W2010141000	FLUID NEEDLE ADJ. KNOB		2,00
5	W2010140900	FLUID NEEDLE GUIDE		3,00
6	W2010140800	FLUID NEEDLE SPRING		2,00
8	W2COM3011	NEEDLE PACKING NUT		2,00
9	W2COM6080	AIR VALVE SET		9,50
9-1	W2010141700	AIR VALVE SPRING		1,50
9-2	W2010130600	AIR VALVE		2,50
9-3	W2010130500	AIR VALVE SEAT		4,50
10	W2COM4001	TRIGGER STUD		3,50
11	93003810	TRIGGER		5,50
12	93845531	AIR ADJUSTMENT SET		36,50
13	W2COM6050	PLUG		1,50
14	W3COM5038	THREADED BUSHING		12,50
15	W2COM5000	AIR NIPPLE		3,00
17	W2COM2006	NEEDLE PACKING		4,50
C	93005550	PACKING SET	(3 pcs./1 pk.)	4,50
D	W2KIT37	AIR VALVE SHAFT TIP SET	(5 pcs./1 pk.)	4,00

REF.	CODE	DESCRIPTION	€
16	W0CUPAZ40IN	PCG-2P-2 GRAVITY CUP 200 ml	35,00
B	W2KIT07	NON DRIP SET (5pcs./1 pk.)	6,00
E	W2KIT06	FILTER SET 50 Mesh (297µ) (5pcs./1 pk.)	19,00
18	13001200	PCG-1P-2 GRAVITY CUP 70 ml	19,50
G	W2KIT52	NON DRIP SET (3 pcs./1 pk.)	6,50
19	930171A0	UNIVERSAL SPANNER	7,00

ACCESSORIES

CODE	DESCRIPTION	€
W2KIT55UK	CLEANING KIT	60,50

SPOT REPAIR

Small refinishing up to a size of about 3.5 cm, partial repairs

LPH-80 (LVLP)

PREMIUM QUALITY

FEATURES

Specific for small repair jobs and areas that are hard to reach
Very fine atomization with low air consumption (60 l/min)
Extremely low material consumption
Perfect handling when blending
Low background noise
205 g: one of the most lightweight Spot Repair spray guns on the market
Simple operation of the control knobs, for right and left handers
Conical seal nozzle, minimum wear parts
Clearer design, easy maintenance
Quality surface for easy cleaning

250 ml Gravity **CUP**

Further **development** of **HVLP** technology

LVLP

LOW **VOLUME** **LOW** PRESSURE

TECHNICAL DATA	Ø mm	No.	bar	mℓ/min	Nℓ/min	mm
LPH-80 - 044G	0.4	E4	1.0	10	60	55
LPH-80 - 064G	0.6			30		80
LPH-80 - 084G	0.8			45		100
LPH-80 - 104G	1.0			60		130
LPH-80 - 124G	1.2			75		140

• Air Nipple: G1/4" • Fluid Nipple: G1/8"

70 ml Gravity **CUP**

ORDER INFORMATION

CARTON **BOX**
with 250 or 70 ml CUP
LPH-80 Spray Gun
PCG-3P-1 CUP - 250 ml
PCG-1P-1 CUP 70 ml
Cleaning Brushes

	ø 0,4	ø 0,6	ø 0,8	ø 1,0	ø 1,2	€
LPH-80 - (with 250 ml CUP)	13180707P	13180717P	13180747P	13180727P	13180737P	266,50
LPH-80 - (with 70 ml CUP)	131807072P	131807172P	131807472P	131807272P	131807372P	266,50
LPH-80 - (with 250 ml +70 ml CUPS)	131807071	131807171	131807471	131807271	131807371	275,50
AIR CAP SET (E4)	93662600					68,00
FLUID NOZZLE SET	93570600	93568600	93761530	93560600	93760530	66,00
FLUID NEEDLE SET	93891600	93890600		93886600		27,50

PCG-3P-1
GRAVITY CUP
250 ml

PCG-1P-1
GRAVITY CUP
70 ml

ANEST IWATA

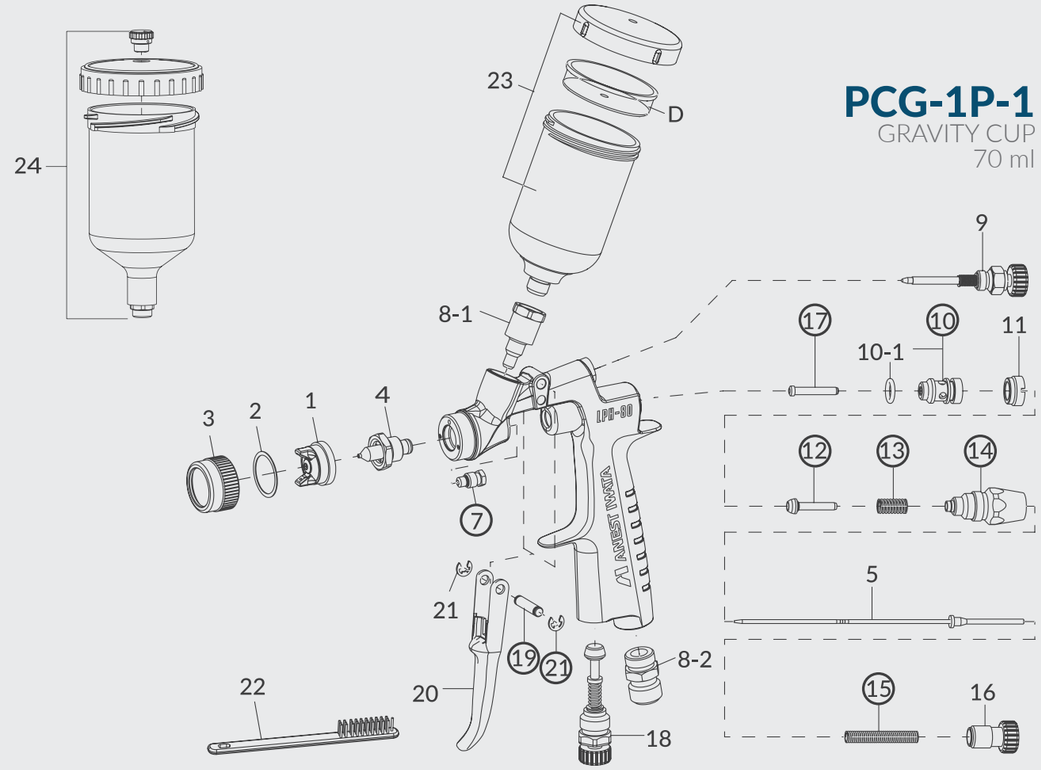

SPARE **PARTS**

REF.	CODE	DESCRIPTION	QTY.	€
1		AIR CAP SET		68,00
4		FLUID NOZZLE SET		66,00
5		FLUID NEEDLE SET		27,50
2	03558600	AIR CAP PACKING		2,90
3	03559600	AIR CAP COVER		16,00
7	93940890	NEEDLE PACKING SET		24,00
8-1	93753530	FLUID NIPPLE		43,50
8-2	03660300	AIR NIPPLE		9,50
9	93748530	PATTERN ADJ. SET		39,00
10	03912880	AIR VALVE SEAT SET		35,50
10-1	06638005	'O'RING		1,50
11	03011880	AIR VALVE SEAT SCREW		5,00
12	03013880	AIR VALVE		16,50
13	03012880	AIR VALVE SPRING		3,50
14	03936880	FLUID ADJ. GUIDE SET		35,50
15	03015880	FLUID NEEDLE SPRING		7,50
16	93754530	FLUID ADJ. KNOB		9,00
17	03006880	AIR VALVE SHAFT		13,50
18	93845531	AIR ADJ. SET		36,50
19	03167890	TRIGGER STUD		6,00
20	03162890	TRIGGER		12,50
21	03912030	E STOPPER	(2 pcs./1 pk.)	3,50
22	W2COM6163	BRUSHES	(5 pcs./1 pk.)	11,00

REF.	CODE	DESCRIPTION	€
23	13678980	PCG-1P-1 GRAVITY CUP 70 ml + NON DRIP SET	19,50
D	W2KIT25	NON DRIP SET (3 pcs./1 pk.)	6,00
24	VPE250	PCG-3P-1 GRAVITY CUP 250 ml	14,50

ACCESSORIES

CODE	DESCRIPTION	€
W2KIT55UK	CLEANING KIT	60,50
W2COM6191	REPAIRING KIT 3 (includes: air valve seat set, air valve, air valve spring, fluid needle spring, air valve shaft, fluid adj. guide set, trigger stud, e stopper, needle packing cartridge).	97,50
93280881	SPANNER for LPH-80	13,50

CUSTOM PAINTING

RG-3L - ROUND PATTERN

HIGH QUALITY

FEATURES

Specific for decorative paintings with regular nozzles
Used for modeling, contours painting and graphics
Fine atomization
For right and left handers
With side cup for best control when working
Individual angle adjustment of the cup
Very low air requirement, 30-50 Nl/min depending on the nozzle size
RG-3L-S3 flat pattern (0.6 nozzle size)
Conical seal nozzle, minimum wear parts
Clearer design, easy maintenance

TECHNICAL DATA	Ø mm	No.	bar	mℓ/min	Nℓ/min	mm
RG-3L 1	0.4	1	2.5	15	30	25
RG-3L 2	0.6	2		35		35
RG-3L 3	1.0	3		80		

• Air nipple: G1/4" • Fluid nipple: G1/4"

200 ml Gravity **CUP**

130 ml Gravity **CUP**

ORDER INFORMATION

CARTON BOX

with 200 or 130 ml CUP
RG-3L Spray Gun
PC-52 AG CUP - 200 ml / PC-61 CUP - 130 ml
Cleaning Brushes

	ø 0,4	ø 0,6	ø 1,0	€
RG-3L SPRAY GUN	13058600	13058610	13058620	259,00
RG-3L SPRAY GUN with 200 ml CUP	13058606	13058616	13058626	289,00
RG-3L SPRAY GUN with 130 ml CUP	13058605	13058615	13058625	318,00
AIR CAP SET	93022890	93025880	93026880	38,50
FLUID NOZZLE SET	93042880	93041880	93040890	37,50
FLUID NEEDLE SET	93910880	93937880	93938880	34,00

	ø 0,6	-	-	€
RG-3L SPRAY GUN	13058650	-	-	310,00
AIR CAP SET	93023881	-	-	88,00
FLUID NOZZLE SET	93041880	-	-	37,50
FLUID NEEDLE SET	93937880	-	-	34,00

PC-52 AG

SIDE
GRAVITY
CUP
200 ml

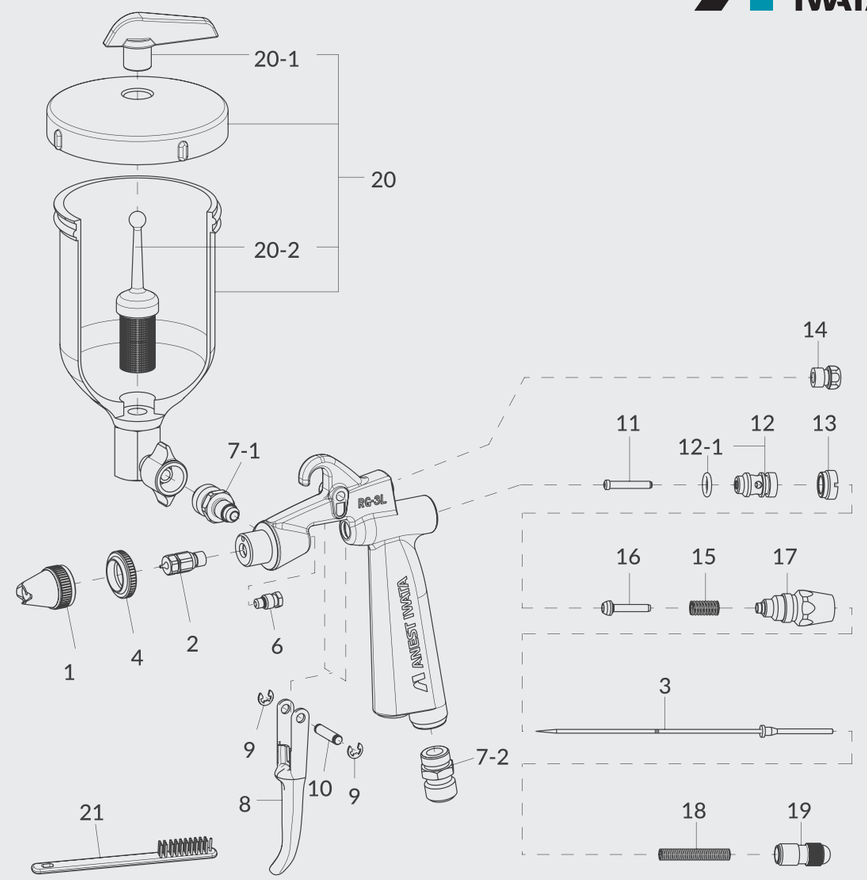

SPARE PARTS

REF.	CODE	DESCRIPTION	QTY.	€
1		AIR CAP SET RG-3L		38,50
1		AIR CAP SET RG-3L-S3		88,00
2		FLUID NOZZLE SET		37,50
3		FLUID NEEDLE SET		34,00
4	03028890	JAM NUT		16,00
6	93940890	NEEDLE PACKING SET		24,00
7-1	93005891	FLUID NIPPLE		16,50
8	03162890	TRIGGER		12,50
9	03912030	E STOPPER		3,50
10	03167890	TRIGGER STUD		6,00
11	03006880	AIR VALVE SHAFT		13,50
12	03912880	AIR VALVE SEAT SET		35,50
12-1	06638005	'O'RING		1,50
13	03011880	AIR VALVE SEAT SCREW		5,00
14	93027880	PLUG		13,50
15	03012880	AIR VALVE SPRING		3,50
16	03013880	AIR VALVE		16,50
17	03936880	FLUID ADJ. GUIDE SET		35,50
18	03015880	FLUID NEEDLE SPRING		7,50
19	03017880	FLUID ADJ. KNOB		9,50
21	W2COM6163	BRUSHES	(5 pcs./1 pk.)	11,00

REF.	CODE	DESCRIPTION	€
20	14018186F	PC-52 AG SIDE GRAVITY CUP 200 ml	33,00
	14018190	PC 61 SIDE GRAVITY CUP 130 ml	63,50

ACCESSORIES

CODE	DESCRIPTION	€
W2KIT55UK	CLEANING KIT	60,50
93280881	SPANNER FOR RG-3L	13,50

AIRBRUSHES

KUSTOM SERIES

PREMIUM QUALITY

FEATURES

High-end airbrush spray gun for professionals in custom painting
Extreme control of ultra fine-line spray
Silky-smooth atomization
Ultimate paint-flow control with hand-tuned, hand-adjusted performance
Teflon packing, large cups, pre-set handles, tall triggers
MAC-System air regulation on material output (Micron CM, Hi-Line CH)

ORDER INFORMATION

	ø 0,23	ø 0,30	ø 0,35
Kustom Micron CM	K 9000	-	-
Kustom Revolution TR	-	K 9400	-
Kustom HI-Line CH	-	K 9100	-
Kustom Eclipse CS	-	-	K 9300

ECLIPSE SERIES

HIGH QUALITY

FEATURES

Double-Action independent air and material control
Paint flow control
Self-centering nozzle
Quick change of nozzles without tools
Easy to clean with plug nozzle
Also available with a suction cup system (HP-BCS)

ORDER INFORMATION

	ø 0,35	ø 0,5
ECLIPSE HP-CS	ECL 4500	-
ECLIPSE HP-SBS	ECL 3500	-
ECLIPSE HP-BS	ECL 2500	-
ECLIPSE HP-BCS	-	ECL 2000

NEO SERIES

STANDARD QUALITY

FEATURES

Perfect to approach the Airbrush word
Double-Action = independent air and material control
Incl. removable cup 7.0 ml and 1.8 ml or without cup for small quantities 1.0 ml
Also available with a suction cup system (HP-BCN)

ORDER INFORMATION

	ø 0,35	ø 0,5
Neo HP-CN	N 4500	-
NEO HP-BCN	-	N 2000

ANEST IWATA

PRESSURE SPRAY GUN

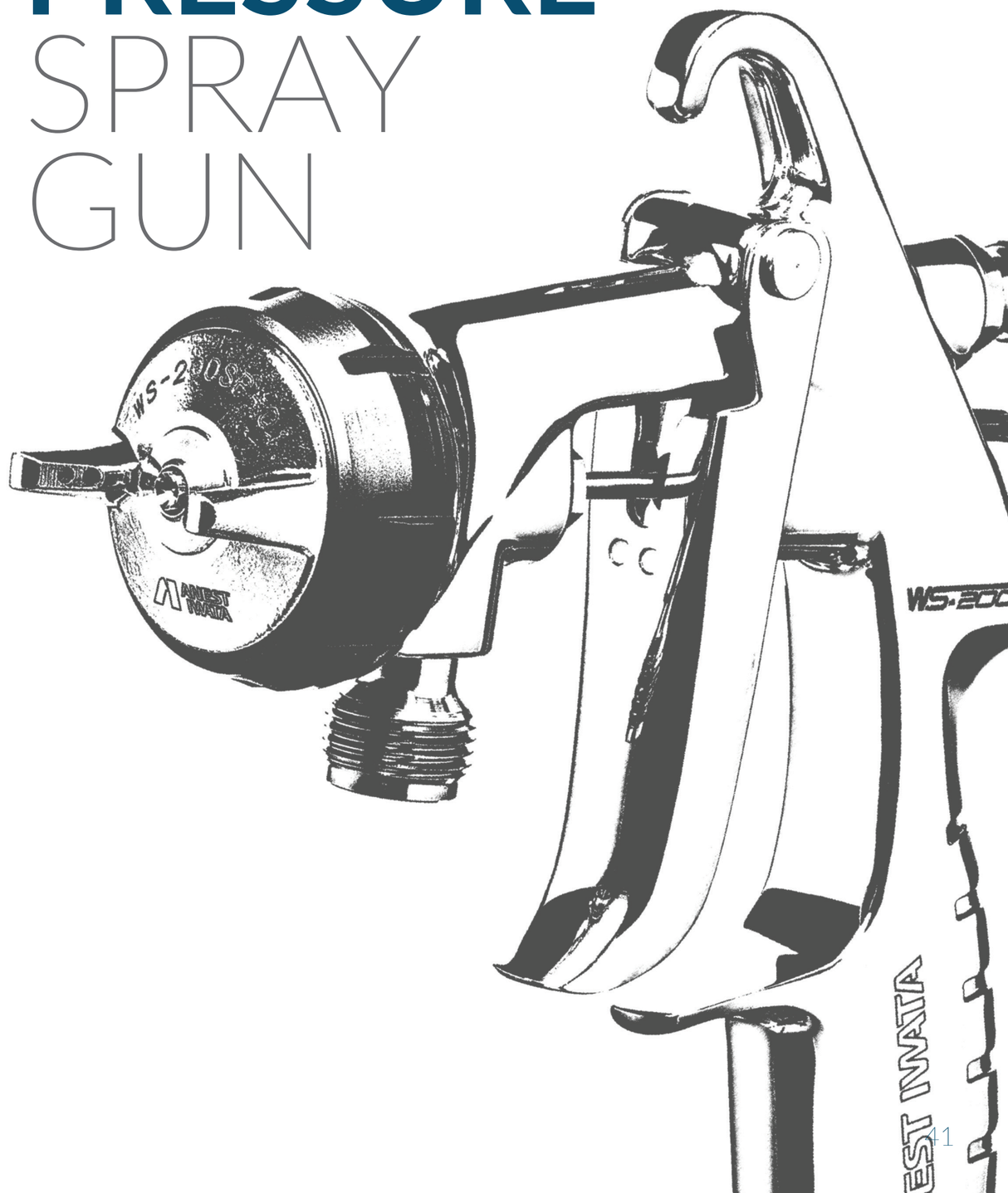

COMMERCIAL VEHICLE APPLICATION

PRESSURE SPRAY GUN **SERIES**

With WS-200 series, ANEST IWATA is launching a completely new generation of pressure spray guns. This series redefined the expectations of the most demanding users in the most diverse application fields. Every single aspect of WS-200 pressure spray guns has been redesigned. The result is now the market launch of the best pressure spray guns ever made. Available in two different versions: • WS-200SP: with newest generation of Pre Atomization Technology (Split nozzle) • WS-200FT: with traditional Flat Tip Nozzle (Round nozzle) delivering high quality results.

WS-200 SP PREMIUM **QUALITY**

TECHNICAL DATA	Ø mm	No.	bar	mℓ/min	Nℓ/min	mm
WS-200 SP Pressure Spray Gun with **Split Nozzle** - Air Nipple: G1/4" • Fluid Nipple: fixed G3/3"						
WS-200SP-0801	0.8	WS-200SP-01	2.5	200	435	210
WS-200SP-1001	1.0			250		230
WS-200SP-1201	1.2			300		240
WS-200SP-1401	1.4			300		240
WS-200SP-1601	1.6			350		255
WS-200SP-1801	1.8			400		265

WS-200

SPLIT NOZZLE™
PRE-ATOMIZATION TECHNOLOGY

ORDER INFORMATION

	ø 0,8	ø 1,0	ø 1,2	ø 1,4	ø 1,6	ø 1,8	€
WS-200 SP SPRAY GUN	13000120	13000130	13000140	13000680	13000690	13000700	545,50
AIR CAP SET (WS-200 SP-01)	93001300						100,50
FLUID NOZZLE + FLUID NEEDLE SET	93007240	93007490	93007550	93007620	93007650	93007660	194,50

WS-200 FT PREMIUM **QUALITY**

TECHNICAL DATA	Ø mm	No.	bar	mℓ/min	Nℓ/min	mm
WS-200 FT Pressure Spray Gun with **Flat Tip Nozzle** - Air Nipple: G1/4" • Fluid Nipple (fixed): G3/8"						
WS-200FT-0801	0.8	WS-200FT-01	2.5	200	380	240
WS-200FP-1001	1.0					210
WS-200FP-1201	1.2					210
WS-200FP-1401	1.4			300		240
WS-200FP-1601	1.6					
WS-200FP-1801	1.8					
WS-200FP-0802	0.8	WS-200FT-02	3.0	200	475	215
WS-200FP-1002	1.0			250		250
WS-200FP-1202	1.2			300		255
WS-200FP-1402	1.4			300		255
WS-200FP-1601	1.6			350		270
WS-200FP-1802	1.8			400		285

CARTON **BOX**
WS-200 SP or WS-200 FT
Spray Gun
Universal Spanner
Cleaning Brushes

ORDER INFORMATION

WS-200

	ø 0,8	ø 1,0	ø 1,2	ø 1,4	ø 1,6	ø 1,8	€
WS-200FT-01 SPRAY GUN	13000150	13000160	13000170	13000600	13000610	13000620	420,00
WS-200FT-02 SPRAY GUN	13000180	13000190	13000200	13000630	13000640	13000650	420,00
AIR CAP SET (WS-20FT-01)	93002070						95,00
AIR CAP SET (WS-20FT-02)	93002190						95,00
FLUID NOZZLE + FLUID NEEDLE SET	93002180	93002150	93002130	93003420	93003480	93003500	97,50

FLAT TIP
NOZZLE

FEATURES

- Perfect surfaces thanks to the Split Nozzle™ technology
- Specific for blending, for example for side walls, bumper and smaller areas
- Barely visible transitions thanks to the soft and fine spray pattern
- Very fine atomization with low air consumption (190 l/min)
- Extremely low material consumption
- Low background noise
- 320 g: one of the most lightweight Smart Repair spray guns on the market
- Simple operation of the control knobs, for right and left handers
- Conical seal nozzle, minimum wear parts
- Clearer design, easy maintenance
- Quality surface for easy cleaning

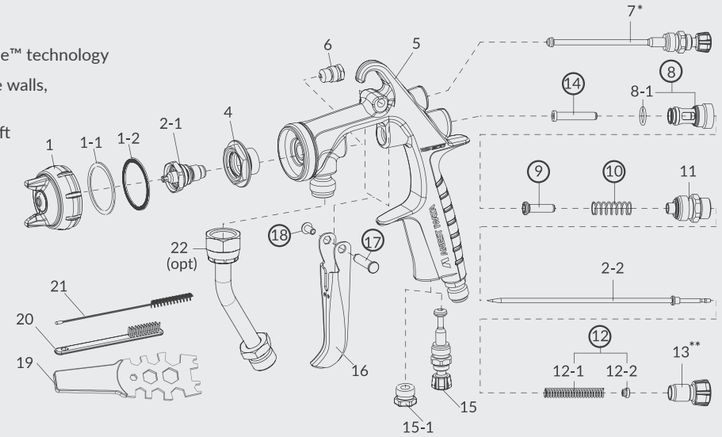

1-1 Air Cap Packing White:	1-2 Air Cap Packing Transparent:	TIPP:	13.1	7.1	7.2	7.3	19.1 SPANNER
Seals air cap to tightening nut	Seals air cap to gun body (transparent seal must be visible from the inside of the air cap)	change always both air cap packings as a couple	Lock Fluid Adjustment*	Quick Fan Pattern Control*	Push Pull Pattern Adjustment Set*	Lock Pattern Adjustment*	for Lock Pattern Adjustment and Lock Fluid Adjustment

SPARE **PARTS**

REF.	CODE	DESCRIPTION	€
1	see left	AIR CAP SET WS-200SP-01	100,50
1	see left	AIR CAP SET WS-200FT-01 and WS-200FT-02	95,00
1-1	93505330	AIR CAP PACKING (WHITE)	4,70
1-2	93001330	AIR CAP PACKING (TRANSPARENT)	4,50
2-1 + 2-2	see left	FLUID NOZZLE + NEEDLE SET WS-200SP	194,50
2-1 + 2-2	see left	FLUID NOZZLE + NEEDLE SET WS-200FT	97,50
2-2	93001380	SPECIAL NEEDLE with TIP in DELRIN ø 0.8; 1.0; 1.2	92,50
2-2	93005700	SPECIAL NEEDLE with TIP in DELRIN ø 1.4; 1.6; 1:8	92,50
4	93007750	BAFFLE RING SET (BAFFLE RING + PACKING)	38,00
6	93810620	NEEDLE PACKING SET	25,85
7	93001561	PATTERN ADJUSTMENT	38,50
7-1	93003300	QUICK PATTERN ADJUSTMENT (opt.)*	149,50
7-2	93003270	PUSH PATTERN ADJUSTMENT (opt.)*	133,00
7-3	93003240	LOCK PATTERN ADJUSTMENT (opt.)*	108,00
8	93001640	AIR VALVE SEAT SET	30,00
8-1	93001680	O RING	3,50
9	93001690	AIR VALVE	20,45
10	93001700	AIR VALVE SPRING	11,70
11	93001710	FLUID ADJUSTMENT GUIDE SET	33,50
12	93002820	NEEDLE SPRING SET	9,50
12-1	93593530	NEEDLE SPRING	6,50
12-2	93001760	NEEDLE SPRING PACKING	3,00
13	93001780	FLUID ADJUSTMENT KNOB	14,50
13-1	93003200	LOCK FLUID ADJUSTMENT (opt.)**	56,50
14	93001790	AIR VALVE SHAFT	17,90
15	93001801	AIR ADJUSTMENT SET	32,50
15-1	93625370	PLUG	23,00
16	93001820	TRIGGER SET	20,00
17	93001870	TRIGGER STUD	7,50

REF.	CODE	DESCRIPTION	€
18	93001960	HEX. SOCKET BUTTON BOLT	2,50
19	930171A0	UNIVERSAL SPANNER	7,00
19-1	93003340	SPANNER for LOCK PATTERN ADJUSTMENT and for LOCK FLUID ADJUSTMENT	14,00
20	W2COM6163	BRUSHES (5 pcs.)	11,00
○	93005690	REPAIRING KIT WS-200 includes: Needle packing set ref. 6; Air valve seat set ref.8; Air valve ref.9; Air valve spring ref.10; Fluid adj. guide set ref.11; Needle spring ref. 12; Air valve shaft ref.14; Trigger stud ref.17; Hex. socket button bolt ref.18	105,00
21	W2COM6162	TWISTED BRUSHES ø10 mm (5 pcs.)	13,00
22	W2COM5052	FLUID TUBE 3/8" Stainless Steel (opt.)	49,50
23	93001540	AIR NIPPLE G1/4"	8,50

ACCESSORIES

REF.	CODE	DESCRIPTION	€
	PJQ-03P	QUICK JOINT NIPPLE 3/8" IG	139,00
	PJQ-03S	QUICK JOINT 3/8" AG	214,00
	14375800	"L" ROTATING AIR HOSE JOINT	21,00
	001004050	TWIN HOSE (Air & Fluid) 1/4"-1/4" mt. 5	72,00
	001004075	TWIN HOSE (Air & Fluid) 1/4"-1/4" mt. 7,5	94,00
	001004100	TWIN HOSE (Air & Fluid) 1/4"-1/4" mt. 10	118,00

COMMERCIAL VEHICLE APPLICATION

ANEST IWATA

W-200 INTEGRA PRESSURE SERIES

The **W-200 INTEGRA** is the sophisticated successor of Anest Iwata's previous W-200 lineup.
While they look almost the same almost all of the internals have been redesigned and improved. This makes the new W-200 INTEGRA your perfect companion for challenging jobs in the Industrial paint application.
The **W-200 INTEGRA SP** utilizing the unique Anest Iwata SPLIT NOZZLE Technology can easily be regognized by its BLUE Air Cap Ring. While the models **W-200 INTEGRA FT** with traditional Flat tips (FT versions) come with SILVER Air Cap Ring.

W-200 INTEGRA SP HIGH QUALITY

SPLIT NOZZLE™ PRE-ATOMIZATION TECHNOLOGY

TECHNICAL DATA	Ø mm	No.	bar	mℓ/min	Nℓ/min	mm
W-200 INTEGRA SP - Pressure Spray Gun - Air Nipple: G1/4" • Fluid Nipple: G3/8"						
W-200SP-08WB1P	0.8	WB1	2.0 ~ 2.5	200	425 ~ 531	360
W-200SP-10WB1P	1.0			250		
W-200SP-12WB1P	1.2			300		380
W-200SP-14WB1P	1.4			350		390
W-200SP-08WBSP	0.8	WBS	2.0 ~ 2.5	200	463 ~ 578	310
W-200SP-10WBSP	1.0			250		320
W-200SP-12WBSP	1.2			300		330
W-200SP-14WBSP	1.4			350		340

SPRAY DISTANCE: 150 ~ 300 mm

NEW

ORDER INFORMATION W-200 INTEGRA

	ø 0.8	ø 1.0	ø 1.2	ø 1.4	€
W-200 INTEGRA SPRAY GUN - WB1	130451A0	130452A0	130453A0	130454A0	472,20
W-200 INTEGRA SPRAY GUN - WBS	130455A0	130456A0	130457A0	130458A0	472,20
AIR CAP SET - WB1	93017310				111,10
AIR CAP SET - WBS	93017430				111,10
FLUID NOZZLE + FLUID NEEDLE SET	93012030	93012020	93012010	93017330	186,10

W-200 INTEGRA FT HIGH QUALITY

FLAT TIP NOZZLE

TECHNICAL DATA	Ø mm	No.	bar	mℓ/min	Nℓ/min	mm
W-200 INTEGRA FT - Pressure Spray Gun - Air Nipple: G1/4" • Fluid Nipple: G3/8"						
W-200SP-08LV2P	0.8	LV2	2.0 ~ 2.5	70	240 ~ 300	140
W-200SP-10LV2P	1.0			110		170
W-200SP-12LV2P	1.2			150		220
W-200SP-15LV2P	1.5			250		270
W-200SP-16LV2P	1.6			300		280
W-200SP-18LV2P	1.8			400		290
W-200SP-08G2P	0.8	G2P	3.0 ~ 3.5	500	500 ~ 583	400
W-200SP-10G2P	1.0					
W-200SP-12G2P	1.2					

SPRAY DISTANCE: 150 ~ 300 mm

NEW

ORDER INFORMATION W-200 INTEGRA

	ø 0.8	ø 1.0	ø 1.2	ø 1.5	ø 1.6	ø 1.8	€
W-200 INTEGRA SPRAY GUN - LV2	130459A0	130460A0	130461A0	130463A0	130506A0	130507A0	338,90
W-200 INTEGRA SPRAY GUN - G2P	130464A0	130465A0	130466A0	----	----	----	347,20
AIR CAP SET - LV2	----	93017360					94,40
AIR CAP SET - G2P	93011670	93011670	93011670	----			100,00
FLUID NOZZLE + FLUID NEEDLE SET	93017270	93017280	93011570	93011680	93018270	93011730	95,80

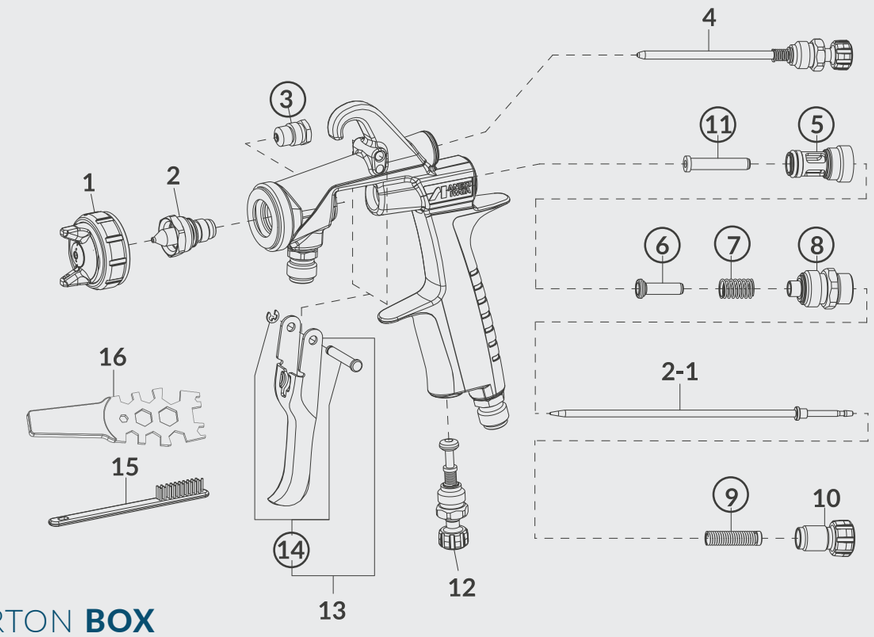

CARTON BOX

W-200 INTEGRA Pressure Spray Gun
Cleaning Brushes
Universal Spanner

FLUID TUBE

PUSH-PULL PATTERN ADJ. SET

QUICK FAN PATTERN CONTROL

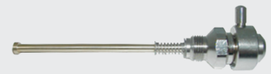

SPARE PARTS

REF.	CODE	DESCRIPTION	€
1	see left	AIR CAP SET (WB1 - WBS1)	111,10
1	see left	AIR CAP SET (LV2)	94,40
1	see left	AIR CAP SET (G2P)	100,00
1-1	93017700	CAP COVER PACKING SET	9,50
1-2	93011560	AIR CAP RING Silver	38,90
1-2	93016870	AIR CAP RING Blue	41,70
2 + 2-1	see left	FLUID NOZZLE + NEEDLE SET (W-200SP)	186,10
2 + 2-1	see left	FLUID NOZZLE + NEEDLE SET (W-200FT)	95,80
3	93810620	NEEDLE PACKING SET	25,85
4	93011630	PATTERN ADJUSTMENT	41,05
5	93001640	AIR VALVE SEAT SET	30,00
6	93001690	AIR VALVE	20,45
7	93001700	AIR VALVE SPRING	11,70
8	93012630	FLUID ADJUSTMENT GUIDE SET	33,30
9	93002820	NEEDLE SPRING SET	9,50
10	93012650	FLUID ADJUSTMENT KNOB	13,30
11	93001790	AIR VALVE SHAFT	17,90
12	93012660	AIR ADJUSTMENT SET	35,10
13	93014500	TRIGGER SET	23,50
14	93013810	TRIGGER STUD	6,90

ACCESSORIES

CODE	DESCRIPTION	REF.	€
W2COM6163	BRUSHES (5 PCS/1PK)	15	11,00
930171A0	UNIVERSAL SPANNER	16	7,00
930356A0	REPAIRING KIT includes: needle packing set (3), air valve seat set (5), air valve (6), air valve spring (7), fluid adj. guide set (8), needle spring set (9), air valve shaft (11), trigger stud set (14).		138,80
14375800	"L" ROTATING AIR HOSE JOINT		21,50
W-200-X1	QUICK FAN PATTERN CONTROL		149,50
93895611	PUSH-PULL PATTERN ADJ. SET		149,50
W2COM5052	FLUID TUBE 3/8" Stainless Steel		49,50
001004050	TWIN HOSE (Air and Fluid) 1/4"-1/4" - 5 m		69,60
001004075	TWIN HOSE (Air and Fluid) 1/4"-1/4" - 7.5 m		94,11
001004100	TWIN HOSE (Air and Fluid) 1/4"-1/4" - 10 m		115,08

COMMERCIAL VEHICLE APPLICATION

ANEST IWATA

W-200 INTEGRA SUCTION SERIES

W-200 INTEGRA SP HIGH QUALITY

SPLIT NOZZLE™ PRE-ATOMIZATIONTECHNOLOGY

TECHNICAL DATA	Ø mm	No.	bar	mℓ/min	Nℓ/min	mm
W-200 INTEGRA SP - Suction Spray Gun - Air Nipple: G1/4" • Fluid Nipple: G3/8"						
W-200SP-16WB2S	1.6	WB2	2.0 ~ 2.5	170	480 ~ 538	315
W-200SP-18WB2S	1.8			200		330
SPRAY DISTANCE: 150 ~ 300 mm						

W-200 INTEGRA

NEW

ORDER INFORMATION

	ø 1.6	ø 1.8	€
W-200 INTEGRA - Spray Gun Only	130471A0	130472A0	463,90
W-200 INTEGRA - With PCL-10B3 Cup	130478A0	130479A0	519,40
W-200 INTEGRA - With PC-12 Cup	130485A0	130486A0	508,30
AIR CAP SET - WB2	93017460		111,10
FLUID NOZZLE + FLUID NEEDLE SET	93017480	93017490	186,10

W-200 INTEGRA FT HIGH QUALITY

FLAT TIP NOZZLE

TECHNICAL DATA	Ø mm	No.	bar	mℓ/min	Nℓ/min	mm
W-200 INTEGRA FT - Suction Spray Gun - Air Nipple: G1/4" • Fluid Nipple: G3/8"						
W-200FT-14S	1.4	LV2	2.0 ~ 2.5	240	240 ~ 300	260
W-200FT-15S	1.5	K2			220 ~ 275	290
W-200FT-18S	1.8			290		340
W-200FT-20S	2.0	R2		350	240 ~ 300	290
W-200FT-25S	2.5	W1		440		280
SPRAY DISTANCE: 150 ~ 300 mm						

W-200 INTEGRA

NEW

ORDER INFORMATION

	ø 1.4	ø 1.5	ø 1.8	ø 2.0	ø 2.5	€
W-200 INTEGRA - Spray Gun Only	130473A0	130474A0	130475A0	130476A0	130477A0	338,90
W-200 INTEGRA - With PCL-10B3 Cup	130480A0	130481A0	130482A0	130483A0	130484A0	394,40
W-200 INTEGRA - With PC-12 Cup	130487A0	130488A0	130489A0	130490A0	130491A0	383,30
AIR CAP SET	LV2 93017360	K2 93011710		R2 93011790	W1 93011820	94,40
FLUID NOZZLE + FLUID NEEDLE SET	93017370	93011680	93011730	93011740	93011810	95,80

PCL-10B3

Suction Container 1lt.

PC-12

Suction Container 1lt.

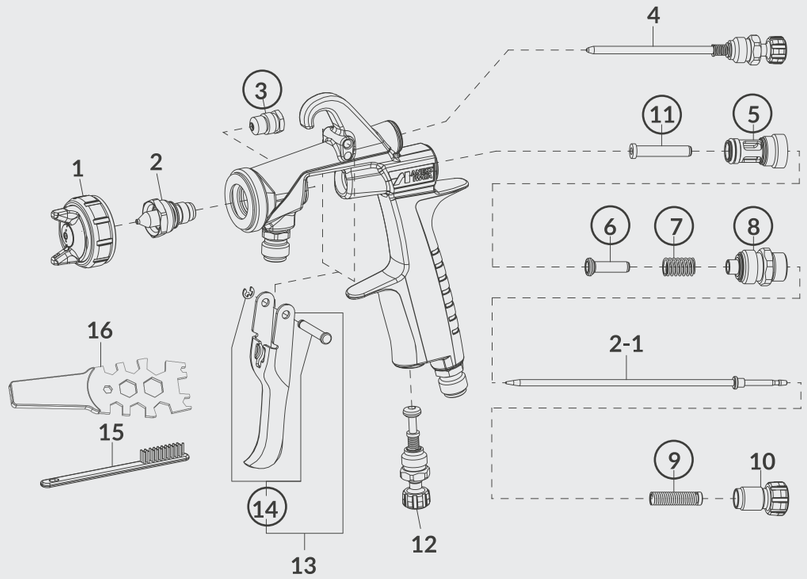

CARTON BOX

W-200 INTEGRA Suction Spray Gun
Cleaning Brushes
Universal Spanner
Suction Cup

PUSH-PULL PATTERN ADJ. SET

QUICK FAN PATTERN CONTROL

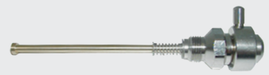

SPARE PARTS

REF.	CODE	DESCRIPTION	€
1	see left	AIR CAP SET (WB2)	111,10
1	see left	AIR CAP SET (LV2 - K2 - R2 - W1)	94,40
1-1	93017700	CAP COVER PACKING SET	9,50
1-2	93011560	AIR CAP RING Silver	38,90
1-2	93016870	AIR CAP RING Blue	41,70
2 + 2-1	see left	FLUID NOZZLE + NEEDLE SET (W-200SP)	186,10
2 + 2-1	see left	FLUID NOZZLE + NEEDLE SET (W-200FT)	95,80
3	93810620	NEEDLE PACKING SET	25,85
4	93011630	PATTERN ADJUSTMENT	41,05
5	93001640	AIR VALVE SEAT SET	30,00
6	93001690	AIR VALVE	20,45
7	93001700	AIR VALVE SPRING	11,70
8	93012630	FLUID ADJUSTMENT GUIDE SET	33,30
9	93002820	NEEDLE SPRING SET	9,50
10	93012650	FLUID ADJUSTMENT KNOB	13,30
11	93001790	AIR VALVE SHAFT	17,90
12	93012660	AIR ADJUSTMENT SET	35,10
13	93014500	TRIGGER SET	23,50
14	93013810	TRIGGER STUD	6,90

ACCESSORIES

CODE	DESCRIPTION	REF.	€
W2COM6163	BRUSHES (5 PCS/1PK)	15	11,00
930171A0	UNIVERSAL SPANNER	16	7,00
14018621	PCL-10 B3 LEVER LOCK SUCTION CUP 1 lt.		67,93
14018200	PC 12 SUCTION CUP 1 lt.		83,70
930171A0 ○	**REPAIRING KIT** includes: needle packing set (3), air valve seat set (5), air valve (6), air valve spring (7), fluid adj. guide set (8), needle spring set (9), air valve shaft (11), trigger stud set (14).		138,80
14375800	"L" ROTATING AIR HOSE JOINT		21,50
W-200-X1	QUICK FAN PATTERN CONTROL		149,50
93895611	PUSH-PULL PATTERN ADJ. SET		149,50
W2COM5052	FLUID TUBE 3/8" Stainless Steel		49,50
001004050	TWIN HOSE (Air and Fluid) 1/4"-1/4" - 5 m		69,60
001004075	TWIN HOSE (Air and Fluid) 1/4"-1/4" - 7.5 m		94,11
001004100	TWIN HOSE (Air and Fluid) 1/4"-1/4" - 10 m		115,08

UNIVERSAL

W-400 Classic **Plus**

HIGH QUALITY

FEATURES

Universal spray gun for industrial coating
VOC-compliant professional spray gun (more than 65% transfer efficiency)
Large and uniformly shaped wet core, even with high viscosity materials
280 Nl/min air consumption; also suitable for small compressors capacity
Low background noise
380 g: one of the most lightweight spray guns on the market
Conical seal nozzle, minimum wear parts
Quality surface for easy cleaning
Clearer design, easy maintenance

TECHNICAL DATA	Ø mm	No.	bar	mℓ/min	Nℓ/min	mm
W-400-082G	0.8	LV2	2.0	60	280	80
W-400-102G	1.0			95		150
W-400-122G	1.2			100		175
W-400-132G	1.3			160		225
W-400-142G	1.4			210		
W-400-162G	1.6			240		270
W-400-182G	1.8	LV1		320	290	260
W-400-202G	2.0	R2	3.0	460	360	320
W-400-251G	2.5	W1		360		340

• Air nipple: G1/4" • Fluid nipple: M16 x 1.5 mm

Classic plus

CARTON **BOX**

W-400 Classic Plus Spray Gun
PCG 6 PE CUP - 600 ml
Cleaning Brushes
Universal Spanner

ORDER INFORMATION

	ø 0,8	ø 1,0	ø 1,2	€
W-400 - PRO KIT	13241401P	13241402P	13241403P	362,50
AIR CAP SET (LV2)	93830610B			95,00
FLUID NOZZLE + FLUID NEEDLE SET	93889610	93890610	93823610	97,50

	ø 1,3	ø 1,4	ø 1,6	€
W-400 - PRO KIT	13241404P	13241405P	13241406P	362,50
AIR CAP SET (LV2)	93830610B			95,00
FLUID NOZZLE + FLUID NEEDLE SET	93881610	-	93832610	97,50
FLUID NOZZLE + FLUID NEEDLE SET	-	93831610	-	97,50

	ø 1,8	ø 2,0	ø 2,5	€
W-400 - PRO KIT	13241407P	13241408P	13241409P	362,50
AIR CAP SET (LV2)	LV1 93859611	R2 93814610B	W11 93813610B	95,00
FLUID NOZZLE + FLUID NEEDLE SET	93821610	93820610	93819610	97,50

PGC-6-PE

GRAVITY
CUP
600 ml

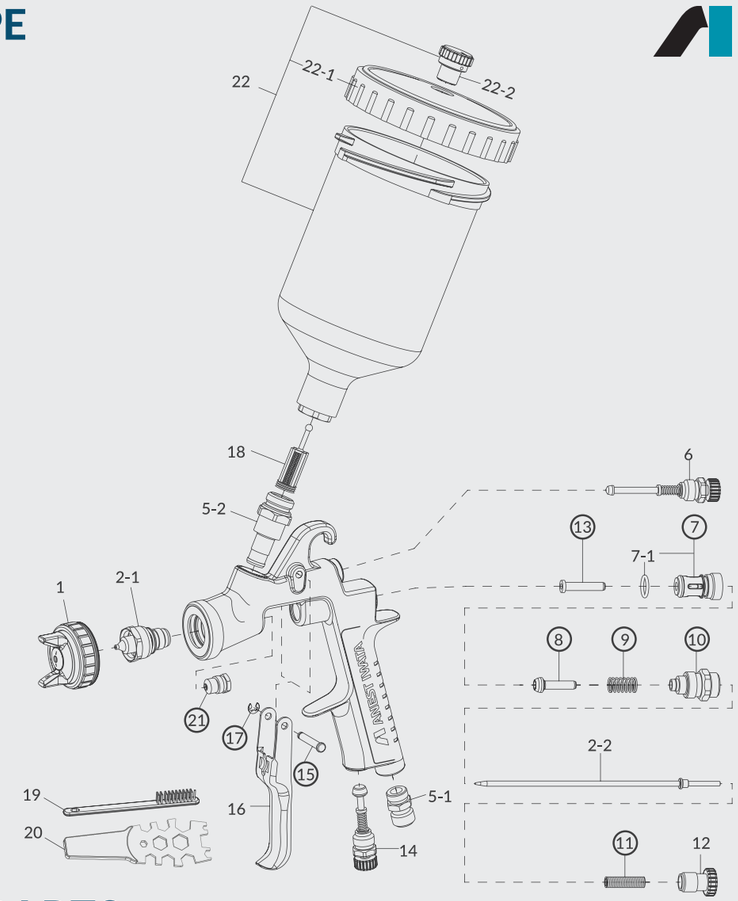

SPARE **PARTS**

REF.	CODE	DESCRIPTION	QTY.	€
1		AIR CAP SET		95,00
2-1+ 2-2		FLUID NOZZLE + NEEDLE SET	ø 0.8/1.0/1.2/1.3/1.6	97,50
2-1+ 2-2		FLUID NOZZLE + NEEDLE SET	ø 1.4	97,50
2-1+ 2-2		FLUID NOZZLE + NEEDLE SET	ø 1.8/2.0/2.5	97,50
5-1	03660300	AIR NIPPLE		9,50
5-2	93650531	FLUID NIPPLE		65,00
6	93842601	PATTERN ADJ. SET		35,00
7	03843530	AIR VALVE SEAT SET		24,00
7-1	06638008	'O'RING		2,50
8	03591530	AIR VALVE		16,50
9	03719530	AIR VALVE SPRING		7,00
10	93844532	FLUID ADJ. GUIDE SET		36,50
11	03593530	FLUID NEEDLE SPRING		7,00
12	93594532	FLUID ADJ. KNOB		14,50
13	93935430	AIR VALVE SHAFT		13,00
14	93845531	AIR ADJ. SET		36,50
15	03667360	TRIGGER STUD		4,00
16	03517600	TRIGGER		17,00
17	03912030	E STOPPER	(2 pcs./1 pk.)	3,50
18	03515500	FILTER 60 Mesh (250µ) Red		1,85
21	93810620	NEEDLE PACKING SET		25,85
19	W2COM6163	BRUSHES	(5 pcs./1 pk.)	11,00
20	930171A0	UNIVERSAL SPANNER		7,00

REF.	CODE	DESCRIPTION	€
22	**14011001**	**PCG-6-PE GRAVITY CUP 600 ml**	51,50
22-1	04002300	LID	9,00
22-2	04003320	NON DRIP	2,00

ACCESSORIES

CODE	DESCRIPTION	€
03708240	AIR CAP PACKING (WHITE)	2,70
03512600	AIR CAP "L" PACKING (BLACK)	4,80
W2KIT55UK	CLEANING KIT	60,50
W2COM6190	REPAIRING KIT 2 (includes: air valve seat set, air valve, air valve spring, fluid needle spring, fluid adj. guide set, air valve shaft, trigger stud, e stopper, needle packing cartridge).	95,50

UNIVERSAL

AZ3 HTE 2

STANDARD QUALITY

FEATURES

Robust work spray gun for with high-viscosity materials

Trigger easy to dose

Simple operation of the control knobs, for right and left handers

Cost of spare parts replacement extremely customer friendly

HTE HIGH TRANSFER EFFICIENCY

TECHNICAL DATA	Ø mm	No.	bar	mℓ/min	Nℓ/min	mm
AZ3 HTE 2	1.0	10-15 HTE	2.0	80	200	180
	1.3			140		240
	1.5			160		260
	1.8	18-20 HTE		250	215	300
	2.0			300		340
	2.5	25 HTE	3.0	450	280	360
	2.8	28-30 HTE		540	300	380
	3.0			560		400
	3.5	35 HTE		600		420

• Air nipple: G1/4" • Fluid nipple: G1/4"

SPECIAL **WRENCH**

ACCESSORIES

ORDER INFORMATION

CARTON **BOX**

AZ3 HTE 2 Spray Gun

PCG-6P-2B AZ CUP - 600 ml

Universal Spanner

	ø 1,0	ø 1,3	ø 1,5	€
AZ3 HTE 2 with 600 ml CUP	WOSPG81AG10C	WOSPG81AG13C	WOSPG81AG15C	109,50
AIR CAP SET	W2CAP80AG15			29,00
FLUID NOZZLE + FLUID NEEDLE SET	W2010133500	W2010133600	W2010133700	21,50

	ø 1,8	ø 2,0	ø 2,5	€
AZ3 HTE 2 with 600 ml CUP	WOSPG81AG18C	WOSPG81AG20C	WOSPG81AG25C	109,50
AIR CAP SET	W2CAP80AG18		W2CAP80AG25	29,00
FLUID NOZZLE + FLUID NEEDLE SET	W2010133800	W2010133900	W2010134000	21,50

	ø 2,8	ø 3,0	ø 3,5	€
AZ3 HTE 2 with 600 ml CUP	WOSPG81AG28C	WOSPG81AG30C	WOSPG81AG35C	109,50
AIR CAP SET	W2CAP80AG30		W2CAP80AG35	29,00
FLUID NOZZLE + FLUID NEEDLE SET	W2010134300	W2010134100	W2010134200	21,50

PCG-6P-2B-AZ

GRAVITY
CUP
600 ml

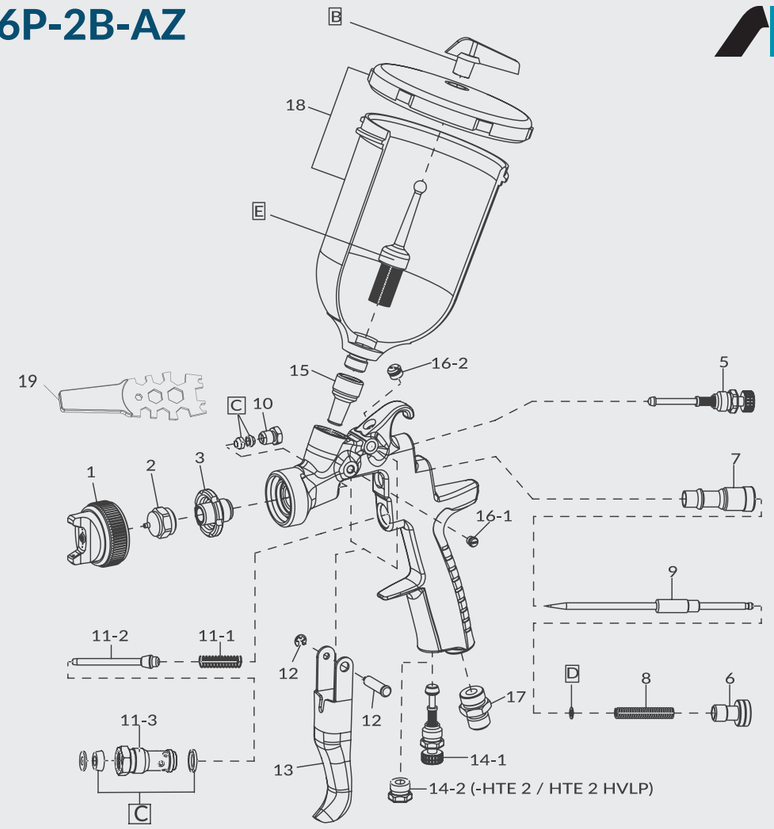

SPARE **PARTS**

REF.	CODE	DESCRIPTION	QTY.	€
1		AIR CAP SET		29,00
2+9		FLUID NOZZLE + FLUID NEEDLE SET	ø 1.0/1.3/1.5	21,50
2+9		FLUID NOZZLE + FLUID NEEDLE SET	ø 1.8/2.0/2.5 2.8/3.0/3.5	21,50
3	W2010140200	NOZZLE HOLDER		7,00
5	93842601	PATTERN ADJ. SET		35,00
6	W2010141000	FLUID NEEDLE ADJ. KNOB		2,00
7	W2010140900	FLUID NEEDLE GUIDE		3,00
8	W2010140800	FLUID NEEDLE SPRING		2,00
10	W2010140600	FLUID NEEDLE PACKING NUT		3,00
11	W2010120100	AIR VALVE SET		8,00
11-1	W2010141700	AIR VALVE SPRING		1,50
11-2	W2010130600	AIR VALVE		2,50
11-3	W2010130500	AIR VALVE SEAT		4,50
12	W2COM4001	TRIGGER STUD		3,50
13	W2COM6051	TRIGGER		5,50
14-1	93845531	AIR ADJ. SET		36,50
14-2	93625370	PLUG		23,00
15	W2013040100	THREADED BUSHING		2,00
16-1	W2COM5004	SCREW		0,50
16-2	W2COM6050	PLUG		1,50
17	W2COM5000	AIR NIPPLE		3,00
C	W2KIT56	PACKING SET	(3 pcs./1 pk.)	4,50
D	W2KIT33	SLIDE RING SET	(10 pcs./1 pk.)	10,00

REF.	CODE	DESCRIPTION	€
18	W0012820100	PCG-6P-2B-AZ GRAVITY CUP 600 ml	13,50
B	W2KIT07	NON DRIP SET (5 pcs./1 pk.)	6,00
E	W2KIT06	NON DRIP	19,00
19	930171A0	UNIVERSAL SPANNER	7,00

ACCESSORIES

CODE	DESCRIPTION	€
W2KIT55UK	CLEANING KIT	60,50
VPACAZ3H2	BLACK PLASTIC CASE (for 1 SPRAY GUN and 1 CUP)	40,00
W2503500100	SPECIAL WRENCH	41,50

ANEST IWATA

PAINT SUPPLY SYSTEM

LOW PRESSURE PNEUMATIC EQUIPMENT

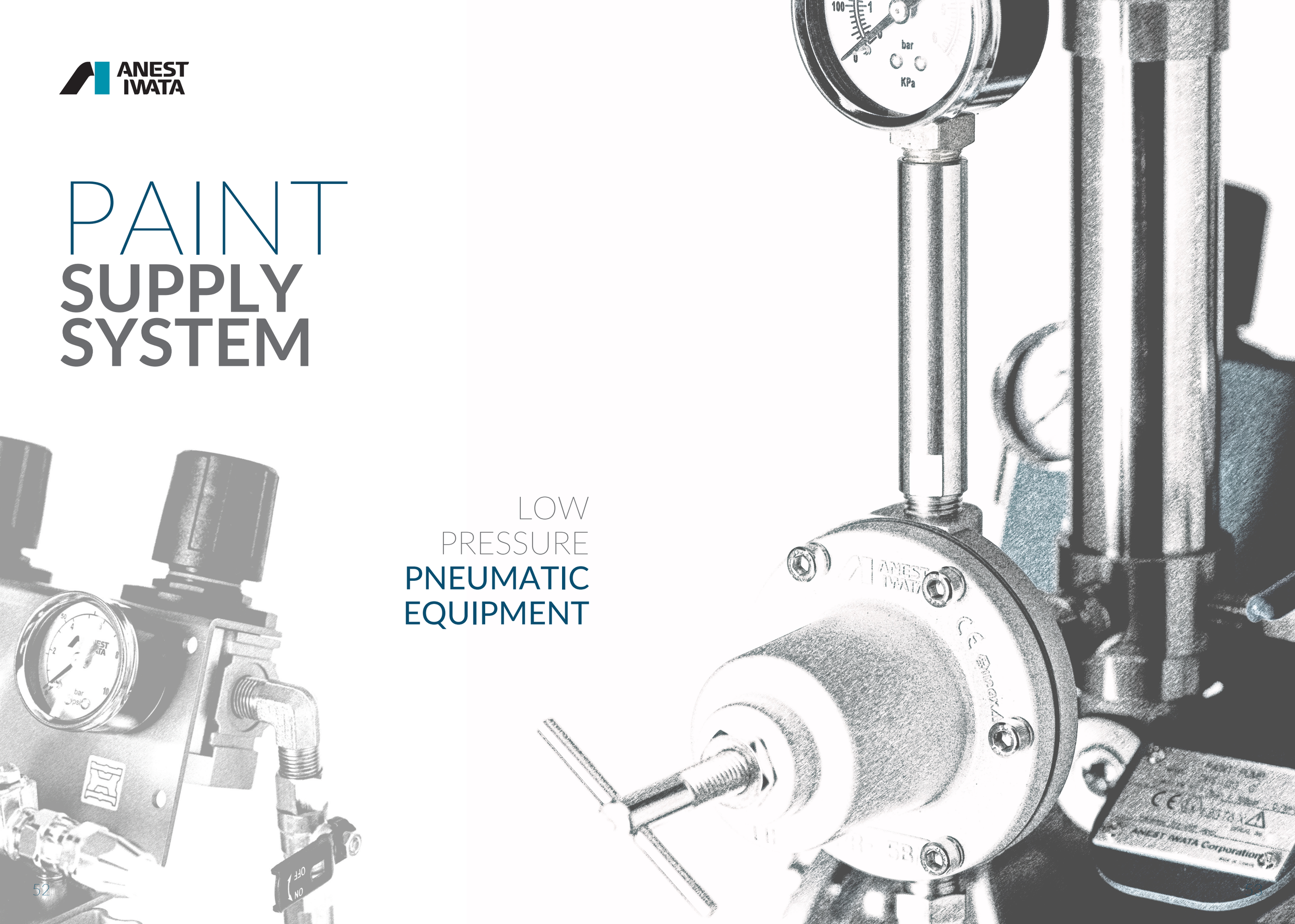

DPS-120 & DPS-90 PUMP UNITS

FEATURES

Double Diaphragm paint pumps come in a compact and stylish designs. They are the perfect choice for the delivery of fluid media (solvent and water-based paints) to the supply of manual and automatic spray guns.

Fully pneumatic pump control with Double Spool air circuit. The reliable pump motor combined with the Double Spool air circuit promises an excellent finish. (Air pressure circuit conform to safety standard UNI EN 12621).

The pneumatic control system prevents the forced stoppage of the pump. Dead storage material channels and easily collapsible pump structure facilitate cleaning, inspection and maintenance.

Wear-resistant pump assembly.

Available also with a 2-way connection (Aluminium & Stainless Steel models).

TECHNICAL DATA		
Ratio	1:1	
Max. Working Pressure	7 bar (100 psi)	
Fluid Output at 30 cyc/min.	4.5 lt./min	1.5 lt./min
Fluid Output at 200 cyc/min. max	30 lt./min	10 lt./min
Paint Viscosity	85 sec/Ford#4	
Working Temperature	5~40 °C	
Paint outlet filter	100 mesh	
Suction paint filter	50 mesh	

ON **STAND**

ON **TANK** MOUNT

ON **CART**

ON **WALL** MOUNT

ON **CART +** HOPPER

PUMP UNIT **DDP-120B.TE**

DPS 120 C / -C-WB / -CN

UNIT ASSEMBLY		MODELS	CODE	€
ALUMINIUM	Pump Unit	DDP-120B.TE	14068690	920,00
	On Stand	DPS-1201C.TE	14069030	1.636,32
	On Tank Mount	DPS-1202C.TE	14069110	1.674,39
	On Cart w/Dip tube	DPS-1203C.TE	14069190	1.915,20
	On Wall Mount	DPS-1204C.TE	14069270	1.716,58
	On Cart w/Hopper	DPS-12036C.TE	14069350	1.938,86
	Paint Pressure Regulator PR-5BL		14608200	295,37

UNIT ASSEMBLY		MODELS	CODE	€
ALU. ANODIZED	Pump Unit	DDP-120B-WB.TE	14068710	1.022,00
	On Stand	DPS-1201C-WB.TE	14069050	1.846,00
	On Tank Mount	DPS-1202C-WB.TE	14069130	1.831,00
	On Cart w/Dip tube	DPS-1203C-WB.TE	14069210	2.136,50
	On Wall Mount	DPS-1204C-WB.TE	14069290	1.938,00
	On Cart w/Hopper	DPS-12036C-WB.TE	14069370	2.048,00
	Paint Pressure Regulator PR-5BL-WB		14608220	307,71

UNIT ASSEMBLY		MODELS	CODE	€
STAINLESS STEEL	Pump Unit	DDP-120B.NTE	14068700	1.839,00
	On Stand	DPS-1201C.NTE	14069040	2.402,00
	On Tank Mount	DPS-1202C.NTE	14069120	2.422,50
	On Cart w/Dip tube	DPS-1203C.NTE	14069200	2.727,00
	On Wall Mount	DPS-1204C.NTE	14069280	2.527,50
	On Cart w/Hopper	DPS-12036C.NTE	14069360	2.636,50
	Paint Pressure Regulator PR-5BLN		14608210	472,36

PUMP UNIT **DDP-90F.TE**

DPS 90 G / -G-WB / -GN

MODELS	CODE	€
DDP-90F.TE	14068660	744,05
DPS-901G.TE	14069000	1.527,24
DPS-902G.TE	14069080	1.581,76
DPS-903G.TE	14069160	1.802.02
DPS-904G.TE	14069240	1.602,37
DPS-9036G.TE	14069320	1.828,77
PR-5BL	14608200	295,37

MODELS	CODE	€
DDP-90F-WB.TE	14068680	864,48
DPS-901G-WB.TE	14069020	1.747,45
DPS-902G-WB.TE	14069100	1.726,88
DPS-903G-WB.TE	14069180	2.036,31
DPS-904G-WB.TE	14069260	1.834,94
DPS-9036G-WB.TE	14069340	1.949,17
PR-5BL-WB	14608220	307,71

MODELS	CODE	€
DDP-90FN.TE	14068670	1.356,09
DPS-901GN.TE	14069010	2.121,04
DPS-902GN.TE	14069090	2.122,06
DPS-903GN.TE	14069170	2.428,75
DPS-904GN.TE	14069250	2.229,10
DPS-9036GN.TE	14069330	2.343,33
PR-5BLN	14608210	472,36

DPS-120 & DPS-90 ACCESSORIES

PAINT PRESSURE **REGULATOR**

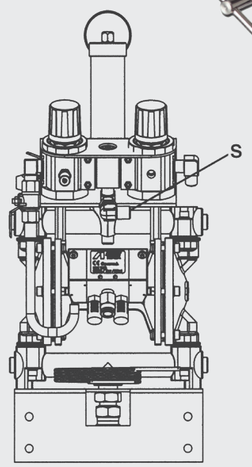

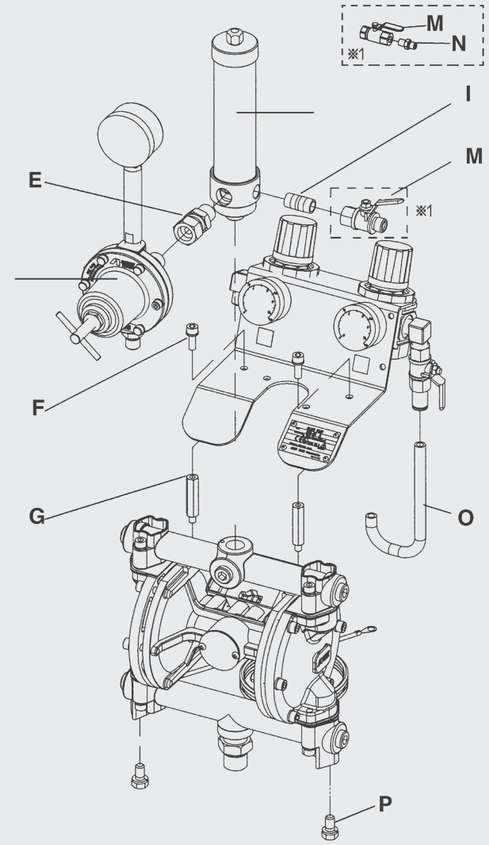

ORDER INFORMATION

REF.	CODE	DESCRIPTION	for MODELS	€
A	14608200	PAINT REGULATOR SET PR-5BL	for Aluminium	295,37
A	14608220	PAINT REGULATOR SET PR-5BL-WB	for Aluminium Anodized	307,50
A	14068210	PAINT REGULATOR SET PR-5BLN		472,50
C	94493020	PAINT FILTER SET		181,00
E	06859803	SWIVEL JOINT	for DPS 120-1C/-2C/-3C/-4C/-36C_DPS 90-1G/-2G/-3G/-4G/-36G	5,00
E	06859591	SWIVEL JOINT	for DPS 120-1CN/-2CN/-3CN/-4CN/-36CN and -WB _DPS 90-1GN/-2GN/-3GN/-4GN/-36GN and -WB	49,50
F	06357501	HEX. SOCKET BOLT WITH WASHER		1,00
G	04493000	CONNECTING BOLT		13,00
I	06642002	NIPPLE		8,00
M	04432650	BALL VALVE		13,20
M	04433630	BALL VALVE	for DPS120-1C/-2C/-3C/-4C/-36C and DPS90-1G/-2G/-3G/-4G/-36G	39,00
N	04343310	JOINT G1/4"R1/4"	for DPS 120-1CN/-2CN/-3CN/-4CN/-36CN and -WB_DPS 90-1GN/-2GN/-3GN/-4GN/-36GN and -WB	13,00
O	04494040	PIPE	for DPS 120-1CN/-2CN/-3CN/-4CN/-36CN and -WB_DPS 90-1GN/-2GN/-3GN/-4GN/-36GN and -WB	1,50
P	06994758	WASHER BOLT		0,50
S	06859563	ELBOW UNION	for DPS 120-4C/-4CN and DPS 90-4G/-4GN	13,00

DOUBLE DIAPHRAGM PUMPS

ORDER INFORMATION - DPS-120 & DPS-90

REF.	CODE	DESCRIPTION	QTY.	DDP-90F	DDP-90FN	DDP-90F-WB	DDP-120B	DDP-120BN	DDP-120B-WB	€
1	94410622	MAIN BODY		X	X	X				171,35
1	94437632	MAIN BODY					X	X	X	231,00
2	94456582	LID		X						101,25
2	94414592	LID			X					166,40
2	94456640	LID				X				112,90
2	94439631	LID					X			105,90
2	94453660	LID						X		179,00
2	94439650	LID							X	110,00
3	94452640	UPPER ADAPTOR		X			X			104,50
3	94414650	UPPER ADAPTOR			X			X		145,50
3	94452650	UPPER ADAPTOR				X			X	100,50
4	06990413	HEXAGON SOCKET PLUG		X			X			3,85
4	06367202	HEXAGON SOCKET PLUG			X	X		X	X	8,50
5	94441630	LOWER ADAPTOR		X			X			105,94
5	94416592	LOWER ADAPTOR			X			X		158,36
5	94441640	LOWER ADAPTOR				X			X	110,26
6	04935620	PACKING SET	(2 pcs.)	X	X	X				12,36
6	94933290	PACKING SET	(2 pcs.)				X	X	X	17,46
7	04931630	EXHAUST VALVE	(2 pcs.)	X	X	X				44,14
7	94935290	EXHAUST VALVE	(2 pcs.)				X	X	X	56,08
8	04932630	'O'RING SET	(2 pcs.)	X	X	X				4,27
8	94930300	'O'RING SET	(2 pcs.)				X	X	X	3,61
9	04930630	STEEL BALL SET	(2 pcs.)	X	X	X				15,97
9	94934290	STEEL BALL SET	(2 pcs.)				X	X	X	30,85
10	04492830	GROUND WIRE		X	X	X	X	X	X	7,83
11	04933630	INTAKE VALVE	(2 pcs.)	X	X	X				44,81
11	94446630	INTAKE VALVE	(2 pcs.)				X	X	X	47,53
12	96357500	HEX. SOCKET BOLT WITH WASHER		X	X	X	X	X	X	1,44
13	96357502	HEX. SOCKET BOLT WITH WASHER		X	X	X	X	X	X	1,44
14	94490632	AIR OPERATING VALVE SET		X	X	X	X	X	X	148,78
15	06361081	HEX. NUT		X	X	X	X	X	X	1,00
16	06362080	SPRING WASHER		X	X	X	X	X	X	0,50
17	04414600	DIAPHRAGM HOLDER (OUTER)		X	X	X				16,50
17	94448630	DIAPHRAGM HOLDER (OUTER)					X	X	X	18,00
18	94453581	DIAPHRAGM HOLDER (INNER)		X	X	X				11,50
18	94449631	DIAPHRAGM HOLDER (INNER)					X	X	X	25,00
19	94931621	DIAPHRAGM SET	(2+2 pcs.)	X	X	X				46,10
19	94932301	DIAPHRAGM SET	(2+2 pcs.)				X	X	X	82,50
21	06996610	'Y'PACKING		X	X	X	X	X	X	8,00
22	06630011	'O'RING		X	X	X	X	X	X	1,50
23	06630008	'O'RING		X	X	X	X	X	X	1,10
24	06630004	'O'RING		X	X	X				0,65
24	06630006	'O'RING					X	X	X	0,70
25	04431590	ROD		X	X	X	X	X	X	139,00
27	04432590	MUFFLER		X	X	X	X	X	X	3,50
28	04456570	BLANKING COVER		X	X	X	X	X	X	11,50
29	06234002	TAPPING SCREW		X	X	X	X	X	X	0,60
30	06800202	ELBOW UNION		X	X	X	X	X	X	13,00
31	04427640	JOINT		X			X			11,20
31	04428640	JOINT			X	X		X	X	37,00
32	94444630	PIN					X	X	X	3,00

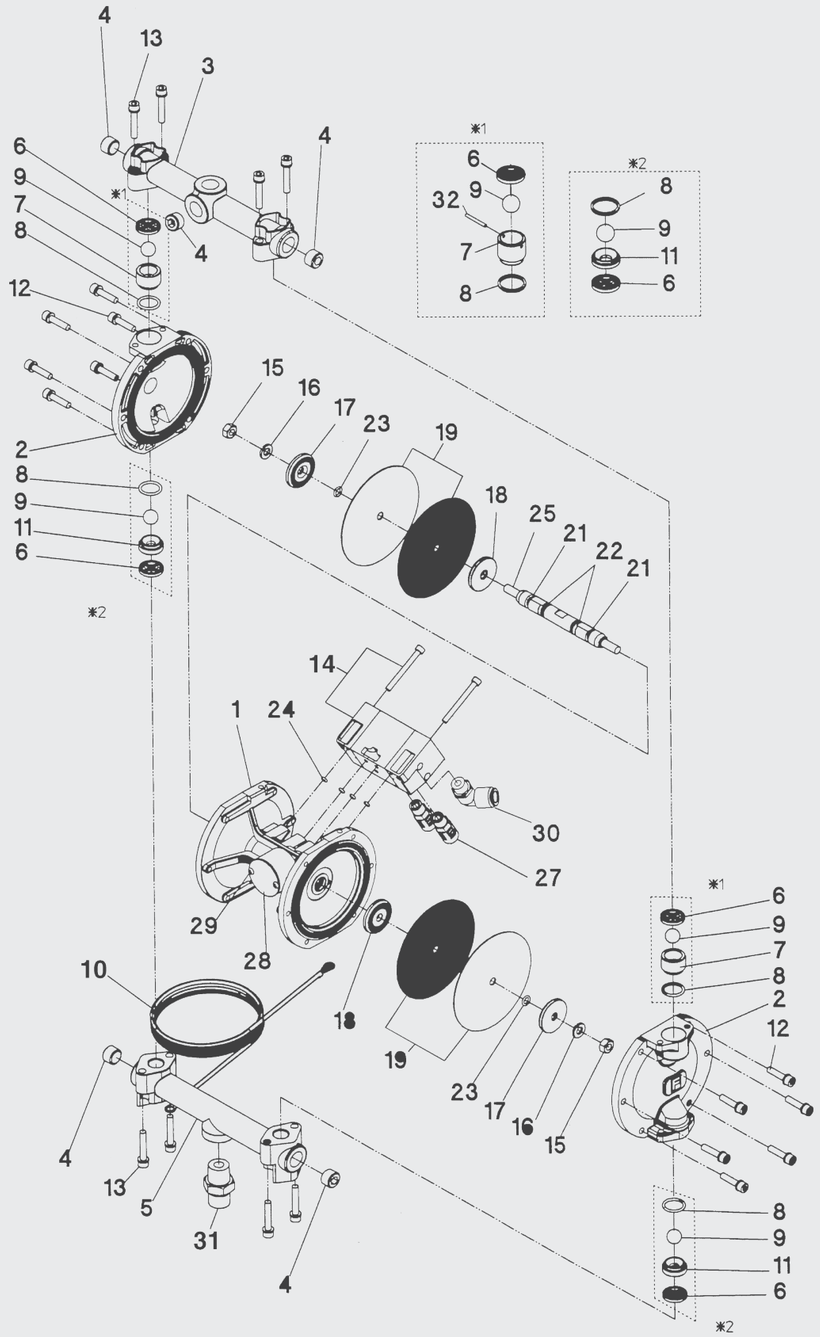

PAINT PRESSURE TANKS

PET SERIES (max. 7.0 bar)

The Anest Iwata PET paint pressure tank series guarantee a valid and reliable fluid supply system for spray guns and other pneumatic equipments. The system is an excellent tool to allow a valid dilution, a correct density and a constant mixing of the paint (constantly stirred if required) with low pressures and flow rates.

stainless steel

TECHNICAL DATA

Max. Working Pressure	7 bar (100 psi)			
Air Inlet Joint	G 1/4"M			
Fluid Outlet Joint	G 3/8"M			
Working Temperature	5~40 °C			
Mass	PET 10 N	15.3 Kg	PET 10 MN	17.5 Kg
	PET 30 N	20.4 Kg	PET 30 MN	22.6 Kg
	PET 50 N	115.3 Kg	PET 50 MN	28.2 Kg
Dimension	PET 10 N /-10 MN		540 x 330 mm	
	PET 30 N /-30 MN		710 x 415 mm	
	PET 50 N /-50 MN		810 x 470 mm	

FEATURES

Stainless steel container, polished inside
PET 10 (10 lt.), PET 30 (30 lt.), PET 50 (50 lt.)
N: without pneumatic agitator
MN: with pneumatic agitator
Second fluid connection (optional)
No additional lubrication of drive required
All models conform to ATEX

ORDER INFORMATION: PET-10 - PET-30 - PET-50

PET SERIES	10 lt	30 lt	50 lt	€
PET-10N	14972600	-	-	2.751,00
PET-10MN with pneumatic agitator	14972620	-	-	2.400,00
PET-30N	-	14972630	-	2.330,00
PET-30MN with pneumatic agitator	-	14972650	-	2.887,00
PET-50N	-	-	14972660	2.751,00
PET50MN with pneumatic agitator	-	-	14972680	3.411,50

PET-50
50 LITROS

Pneumatic Agitator
AM-6B
Operating pressure: 1÷1.5 bar
Air consumption: 15 Liter/min,
Max. air inlet pressure: 7.0 bar

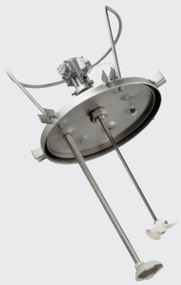

PET-30
30 LITROS

PET-10
10 LITROS

N. Without Pneumatic Agitator

MN. Without Pneumatic Agitator

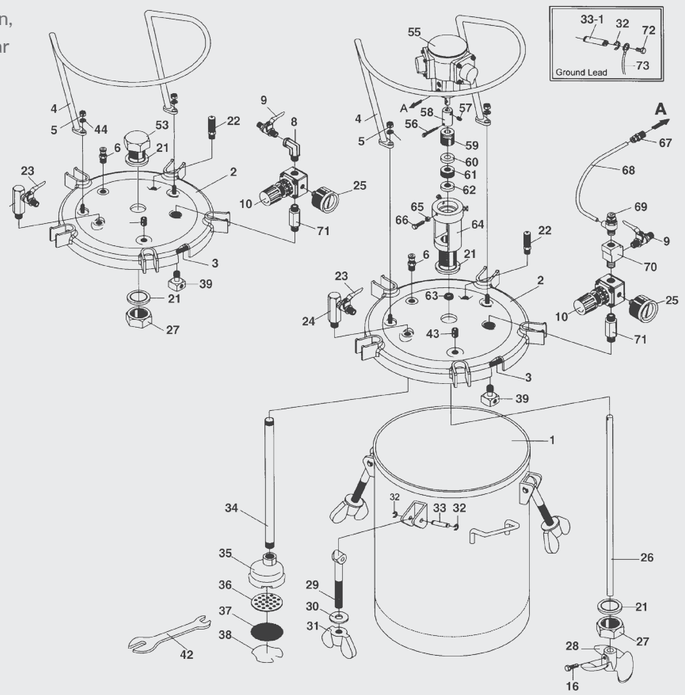

ORDER INFORMATION

REF.	CODE	DESCRIPTION	10N	10MN	30N	30MN	50N	50MN	€
3	04015110	LID PACKING	X	X					24,50
3	04015240	LID PACKING			X	X			32,50
3	04016170	LID PACKING					X	X	48,50
4	04015250	HANDLE			X	X			114,00
4	04019250	HANDLE	X	X					79,50
4	04016180	HANDLE					X	X	143,00
5	04015140	HEXAGON NUT	X	X	X	X	X	X	0,60
6	04015150	EXHAUST VALVE	X	X	X	X	X	X	10,50
8	04015460	ELBOW	X		X		X		7,00
9	04015170	TWO WAY VALVE (Air Inlet)	X	X	X	X	X	X	11,00
10	94015180	AIR PRESSURE REGULATOR	X	X	X	X	X	X	66,65
16	04019040	HEAD BOLT		X		X		X	1,00
21	04019100	SEALING RING	X	X	X	X	X	X	8,00
22	04002211	SAFETY VALVE	X	X	X	X	X	X	23,00
23	04015450	TWO WAY VALVE (Fluid outlet)	X	X	X	X	X	X	40,50
24	04015470	FLUID OUTLET ADAPTER	X	X	X	X	X	X	32,50
25	04016190	PRESSURE GAUGE	X	X	X	X	X	X	13,50
26	04016400	ROD + COUPLIING (56+57+58)		X					53,00
26	04016410	ROD + COUPLIING (56+57+58)				X			62,00
26	04016420	ROD + COUPLIING (56+57+58)						X	81,00
27	04019120	FIXING NUT	X	X	X	X	X	X	30,50
28	04016430	PROPELLER		X		X		X	14,50
29	04015490	SWING BOLT	X	X	X	X	X	X	28,00
30	04016200	WASHER	X	X	X	X	X	X	3,50
31	04016210	THUMB NUT	X	X	X	X	X	X	32,50
32	94020220	E-STOPPER	X	X	X	X	X	X	1,00
33	94020230	PIN	X	X	X	X	X	X	4,00
33-1	04016440	PIN (SUS)	X	X	X	X	X	X	5,10
34	04016450	SUCTION PIPE	X	X					31,50
34	04016460	SUCTION PIPE			X	X			40,00
34	04016470	SUCTION PIPE					X	X	45,00
35	04015270	FILTER COVER			X	X	X	X	14,00
35	04016260	FILTER COVER	X	X					10,50
36	04015280	FILTER BASE			X	X	X	X	4,00
36	04016270	FILTER BASE	X	X					3,50
37	04015290	FILTER (40 Mesh)			X	X	X	X	4,00
37	04016280	FILTER (40 Mesh)	X	X					3,50
38	04015300	FILTER STOPPER			X	X	X	X	4,00
38	94016290	FILTER STOPPER	X	X					3,55
39	94016310	AIR FLOW GUIDE	X	X	X	X	X	X	12,50
43	06990412	HEX. SOCKET SCREW			X	X	X	X	6,00
44	06500804	SPRING WASHER	X	X	X	X	X	X	0,50
53	04016480	HEAD BOLT	X		X		X		81,00
55	AM-6B	PNEUMATIC AIR MOTOR		X		X		X	421,50
59	04017410	PACKING SEAT		X		X		X	15,50
60	04017420	"V" PACKING FEMALE ADAPTOR		X		X		X	4,50
61	04017430	"V" PACKING		X		X		X	9,50
62	04017440	"V" PACKING MALE ADAPTOR		X		X		X	4,50
63	04017450	O-RING		X		X		X	3,50
64	04017460	AIR MOTOR SUPPORT		X		X		X	211,00
65	04017470	HEX. NUT		X		X		X	0,50
66	04017480	HEAD BOLT		X		X		X	2,10
67	03014470	QUICK COUPLING		X		X		X	5,00
68	04018100	AIR HOSE		X		X		X	1,65
69	04018110	SPEED CONTROLLER		X		X		X	29,50
70	04018120	ADAPTER		X		X		X	6,50
71	04018130	ADAPTER	X	X	X	X	X	X	14,50
72	04018140	SCREW	X	X	X	X	X	X	0,50
73	04018150	GROUND WIRE	X	X	X	X	X	X	4,00

PAINT PRESSURE TANK

PET-10 (max- 4.0 bar)

FEATURES

Paint pressure tank with stainless steel inner tank for easy filling of the appropriate material and a trouble-free interior cleaning

Robust construction

Suitable for hydraulic products

Carry handle for quick and easy transport

Equipped with locking lid, 2 controllers, 2 pressure gauges and safety valve

Conform to ATEX

INNER TANK IN **STAINLESS STEEL**

TECHNICAL DATA

Max. Operating pressure	4.0 bar
Tank capacity	10 liter, inner tank 8.5 liter stainless steel
Air inlet joint	G 1/4"M
Fluid output joint	3/8"M
Operating temperature	5-40 °C
Weight	11 Kg
Dimensions	310x310x565 mm

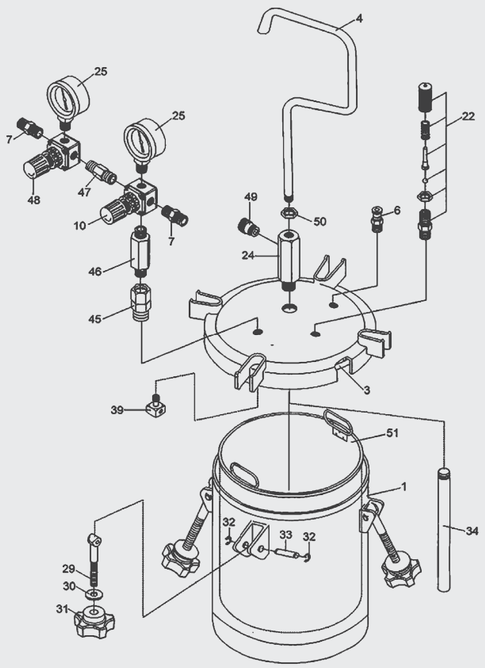

ORDER INFORMATION

REF.	CODE	DESCRIPTION	€
	14972400	PET-10 PRESSURE TANK 10 lt.	810,00
3	94020200	LID PACKING	26,00
4	94020020	HANDLE	20,50
6	94020030	EXHAUST VALVE	9,50
7	94020210	AIR INLET JOINT / OUTLET JOINT G1/4"	8,00
10	94008260	PRESSURE REGULATOR (FOR TANK)	67,50
22	94016391	SAFETY VALVE	23,00
24	94020040	FLUID OUTLET CONNECTING JOINT SUS 303	27,00
25	94016020	PRESSURE GAUGE	20,50
29	94020190	HANDLE BOLT	5,50
30	94020060	WASHER	1,00
31	94020070	THUMB NUT	27,00
32	94020220	C-SNAP RING	1,00
33	94020230	STUD	4,00
34	94020090	SUCTION PIPE SUS 303	31,50
39	94016310	AIR FLOW GUIDE	12,50
45	94020100	ADAPTER	11,00
46	94020110	ADAPTER	11,50
47	94020120	ADAPTER	5,00
48	94020130	PRESSURE REGULATOR (FOR GUN)	61,00
49	94020140	FLUID OUTLET JOINT SUS 303 3/8"	9,50
50	94020160	NUT	1,00
51	94020170	INNER TANK SUS 304	119,00

PRESSURIZED CONTAINER

PC-18 D (max-3.5 bar)

FEATURES

Small Paint Pressure Tank Aluminum 2 liters

Max. operating pressure: 3.5 bar

Operating temperature: 5-40° C

Fluid Nipple: G 3/8" (PF3/8")

ORDER INFORMATION

REF.	CODE	DESCRIPTION	€
	14018900	PC-18D PRESSURIZED CONTAINER	418,00
1	94056350	FLUID JOINT	33,00
2	94055350	HANDLE	61,50
3	94057350	HANDLE JOINT	25,00
4	94003350	AIR RELEASE VALVE	7,50
5	94053350	LID	184,50
6	94900210	LID PACKING (2 pcs./1 pk.)	5,50
7	94001350	SUCTION PIPE	14,50
8	94000351	CONTAINER SET	247,00
9	94007350	SAFETY VALVE	30,50
9-1	04012350	PLUG	4,50
9-2	04011350	NUT	7,00
9-3	04010350	SAFETY VALVE SPRING	4,50
9-4	04009350	SAFETY VALVE SPRING SEAT	4,50
9-5	04008350	SAFETY VALVE BODY	15,50
10	94048400	PRESSURE GAUGE	65,50
11	94027350	JOINT	12,50
12	94049350	AIR REGULATOR BODY SET	176,50
13	06631012	'O'RING	1,10
14	04016350	SPRING	4,50
15	04017350	REGULATOR SEAT	8,00
16	04018350	GUIDE	10,00
17	04019350	DIAPHRAGM SET	17,50
18	04023350	DIAPHRAGM SET SPRING	4,00
19	04038350	SPRING HOLDER	18,00
20	04024350	CAP	24,00
21	04025350	NUT	6,00
22	04026350	KNOB	9,50
23	94058350	NUT	6,00
24	94069350	VALVE	59,00

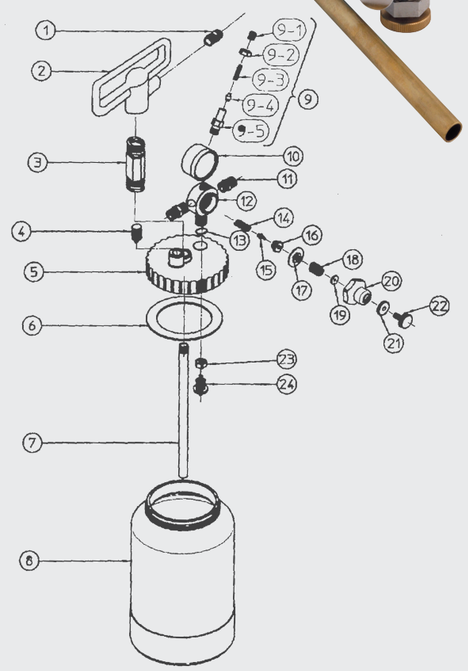

ANEST IWATA

CUPS FILTERS **AND** ADAPTERS

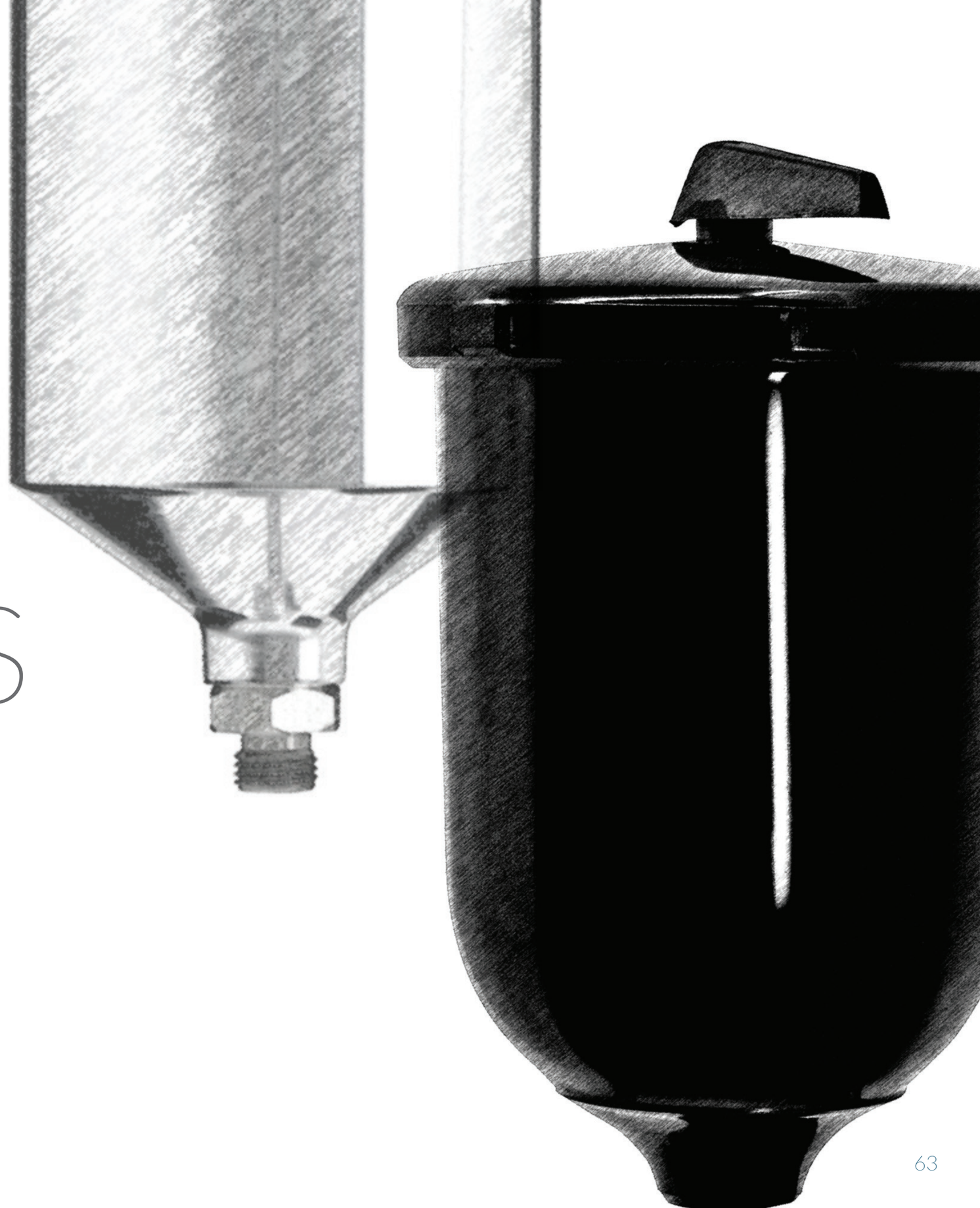

UV CUPS

GRAVITY CUPS - ORDER INFORMATION

CENTRAL 600 ml

PC-G600P-2
Code: 1409100
Connection: G1/4" (PF1/4")
Cpty.: 600 ml
Available for: WS-400 - LS-400
W300 WB (opt.) - LPH-300
Price: € 56,50

PCG-6P-2-AZ
Code: W0CUPAZ90
Connection: G1/4" (PF1/4")
Cpty.: 600 ml
Available for: AZ3 HTE 2
AZ3 HTE-S Impact
Price: € 36,00

PCGP-6P-2B-AZ
Code: W0CUPAZ85
Connection: G1/4" (PF1/4")
Cpty.: 600 ml
Available for: AZ3 HTE P.A.S.
Concept
Price: € 94,50

CENTRAL 200 ml

PCG-2P-2
Code: W0CUPAZ40IN
Connection: G1/4" (PF1/4")
Cpty.: 200 ml
Available for: W-300 WB - LPH-300 (opt .)
AZ4 HTE-S Impact Junior
Price: € 35,00

SIDE 200 ml

PC-52 AG
Code: 14018186F
Connection: G1/4" (PF1/4")
Cpty.: 200 ml
Available for: RG-3L
Price: € 33,00

PCG-6-PE
Code: 14011001
Connection: M16 x 1.5 F
Cpty.: 600 ml
Available for: WS-400 Series
Price: € 51,50

PCG-6P-2B-AZ
Code: W0012820100
Connection: G1/4" (PF1/4")
Cpty.: 600 ml
Available for: AZ3 HTE 2
Price: € 13,50

CENTRAL 250 ml

PCG-3P-1
Code: VPE 250
Connection: G1/8" (PF1/8")
Cpty.: 250 ml
Available for: LPH-80 (opt.)
Price: € 14,50

PCG-2P-2B-AZ
Code: W0CUPAZ40
Connection: G1/4" (PF1/4")
Cpty.: 200 ml
Available for: AZ40 THE
Price: € 15,00

SIDE 130 ml

PC-61
Code: 14018190
Connection: G1/4" (PF1/4")
Cpty.: 130 ml
Available for: RG3L - LPH 50
Price: € 63,50

GRAVITY CUPS - ORDER INFORMATION

CENTRAL 70 ml

PCG-1P-1
Code: 13678980
Connection: G1/8" (PF1/8")
Cpty.: 70 ml
Available for: LPH-80
Price: € 19,50

PCG-1P-1B-AZ
Code: W00012320100
Connection: G1/8" (PF1/8")
Cpty.: 70 ml
Available for: AZ5
Price: € 7,50

PCG-1P-2
Code: 13001200
Connection: G1/4" (PF1/4")
Cpty.: 70 ml
Available for: AZ4 HTE-S
Impact Junior
Price: € 19,50

FILTERS
ORDER INFORMATION

Code: 94011240
Description: 60 MESH (250µ)
Available for: WS-400 (600 ml) - LS-400 (600 ml) - W-300 WB (opt.)
Price: € 1,85

Code: 03515500
Description: 60 MESH (250µ)
Available for: W-400 Series (600 ml)
Price: € 1,85

Code: W2KIT06
Description: 60 MESH (250µ)
Qty.: 5 pcs.
Available for: W-300 WB (200 ml) - LPH-300 (opt.) - AZ3 HTE2 (600 ml)
AZ3 HTE S Impact (600 ml)
Price: € 19,00

3M&PPS ADAPTERS
ORDER INFORMATION

Code: 060075A0 - **Model:** TYP 6
Available for: W-300 WB - LPH-300 - **Price:** € 46,00

Code: 060074A0 - **Model:** TYP 2
Available for: W-400 Classic Series - LPH-400 **Price:** € 46,00

Code: 060059A0 - **Model:** TYP 43
Available for: WS-400 - LS-400 - AZ3 HTE2 - AZ3 HTE S Impact - **Price:** € 43,00

Code: 060076A0 - **Model:** TYP 31
Available for: LPH-80 - **Price:** € 46,00

BLACK GRAVITY CUPS - ORDER INFORMATION

FOR UV-CURED PAINT

The UV CUPS are an addition to our standard line of cups. Thanks to their black color they help protecting UV-cured paints from unwanted exposition.

UV CUPS

CENTRAL 600 ml

PCG-6P-M-S1
Code: 13000330
Connection: G1/4" (PF1/4")
Cpty.: 600 ml
Available for: W-400 LPH-400 Classic Plus Series
Price: € 52,50

CENTRAL 200 ml

PCG-2P-2-S1
Code: 140025A0
Connection: G1/4" (PF1/4")
Cpty.: 200 ml
Available for: W-300 WB UV
Price: € 32,50

CENTRAL 70 ml

PCG-1P-1-S1
Code: 13000230
Connection: G1/8" (PF1/8")
Cpty.: 70 ml
Available for: LPH-80
Price: € 19,50

Air-Gunsa ANEST IWATA Group

UV BLACK CUP
Code: W0CUPAZ91
Connection: G1/4" (PF1/4")
Cpty.: 600 ml
Available for: AZ3 HTE IMPACT
Price: € 36,00

ALUMINIUM GRAVITY CUPS FILTERS and ADAPTERS

ORDER INFORMATION

CENTRAL 1000 ml

PCG10EM
Code: VAIU6034E
Connection: M16 x 1,5 F
Cpty.: 1000 ml
Available for: W-400 Series
Price: € 52,00

CENTRAL 400 ml

PCG4D-2
Code: VAIU6031D
Connection: G1/4" (PF1/4")
Cpty.: 400 ml
Spray gun models: WS-400 - LS-400 - W-300 WB - LPH-300
Price: € 43,50

CENTRAL 70 ml

PCG2D-1
Code: VAIU6050
Connection: G1/8" (PF1/8")
Cpty.: 70 ml
Available for: LPH-80
Price: € 31,50

CENTRAL 700 ml

PCG7D-2
Code: VAIU6032D
Connection: G1/4" (PF1/4")
Cpty.: 700 ml
Available for: WS-400 - LS-400 - W-300 WB - LPH-300
Price: € 48,00

PCG7EM
Code: VAIU6033E
Connection: M16 x 1.5 F
Cpty.: 700 ml
Available for: W-400 Series
Price: € 48,00

CENTRAL 150 ml

PCG2D-2
Code: VAIU6030D
Connection: G1/4" (PF1/4")
Cpty.: 150 ml
Available for: WS-400 - LS-400 - W-300 WB - LPH-300
Price: € 41,50

PCG2B-1
Code: VAIU6036D
Connection: G1/8" (PF1/8")
Cpty.: 150 ml
Available for: LPH-80
Price: € 41,50

HIGH T.E.C. UNDER GUN FILTER

ORDER INFORMATION - for PRESSURE SPRAY GUNS

FEATURES

The High T.E.C. filter consists of a filter housing, in order to couple the filter between the gun and the fluid hose. It is available in 3 filtrations. It has a large filtration surface and can be used with hydro-soluble products.

high T.E.C. Transfer Efficiency Control

CODE	DESCRIPTION	QTY.	€
FILTER HOUSING: in Derlin material for solvent and water based paint			
VLA006225	HIGH T.E.C. FILTER HOUSING	F 3/8"-M 3/8"	31,50
VLA62251414	HIGH T.E.C. FILTER HOUSING	F 1/4"-M 1/4"	31,50
VLA62251438	HIGH T.E.C. FILTER HOUSING	F 1/4"-M 1/4"	30,00
FILTER: in Polyamide (PA) plain weave PLASTIC BODY: in Polypropylene (PP)			
VLA6225340	UNDERGUN FILTER	WHITE	3,00
VLA6225100	UNDERGUN FILTER	BLUE	3,00
VLA6225052	UNDERGUN FILTER	GREEN	3,00

ANEST IWATA

GENERAL ACCESSORIES

HEALTH PROTECTION

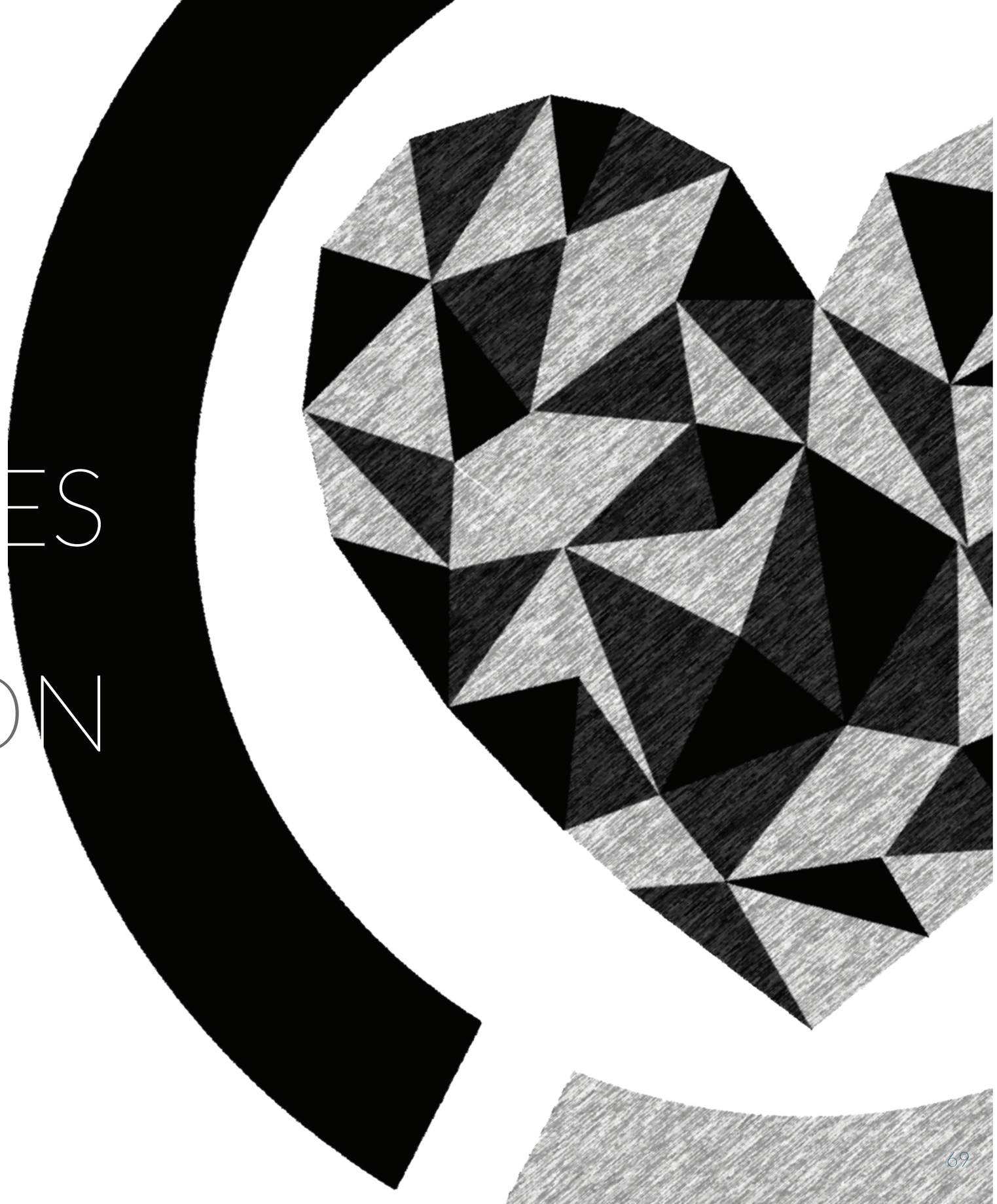

ANEST IWATA OVERALL

PREMIUM QUALITY

TECH WARD

IMPROVED FIT AND HIGH FULL DAY COMFORT

The New Premium Spray Overall provides optimum protection against overspray and prevents pollution of the painting job by fibres, dust and lint. It has been designed with the user in mind, to guarantee a full day comfort and to responds to all our users safety necessity by an improved antistatic fiber most resistant and a new designed hood for a better fit.

PERSONAL PROTECTIVE EQUIPMENT (PPE)

Category I according to the European Directive 2016/425
Basic PPE protects against minimal risks.

OVERALL'S SIZE CHART

SIZE	S	M	L	XL
EU	46	48	50	52-54
HIGH	170-174 cm	174-178 cm	178-182 cm	182-190 cm
CHEST	86-94 cm	94-102 cm	102-110 cm	110-118 cm
WAIST	70-78 cm	78-86 cm	86-94 cm	94-102 cm

Bicolored Overall in two different dark grey tones

Nylon fabric (EN 1149-1: 2006) with 1% carbon thread for maximum antistatic ability

According to 1149-3 Method 2: Induction decay time

Perfect fit for all sizes

Maximum movability

Dirt and water repellent, protects against overspray

Dust and lint free

High durable blind zipper

Underarm aeration net

Waist with elastic band

Tight fit to neck, sleeves and ankles cuffs

2 side pockets

Available sizes : S-M-L-XL

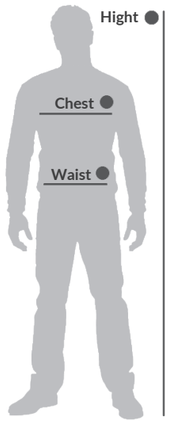

ORDER INFORMATION

CODE	DESCRIPTION	SIZE	€
150006A0	PREMIUM SPRAY OVERALL	S	134,00
150007A0	PREMIUM SPRAY OVERALL	M	134,00
150008A0	PREMIUM SPRAY OVERALL	L	134,00
150009A0	PREMIUM SPRAY OVERALL	XL	134,00

GOGGLES & GLASSES VISIONSHIELD SERIES

OVER-GLASSES PROTECTIVE GOGGLES

FEATURES

Polycarbonate lens, offers protection from medium energy hi-speed particles, the frame offers protection against large dust particles and liquid droplets.

Soft rubber frame provides comfort for longtime.

CONFORMS TO EN166:2001

LENS MARKING: 2 - 1.2 XXX 1 B 9	
2	**Radiation protection:** (2= UV filter)
1.2	**Gradation:** (1.2= Transparent)
XXX	**Identification on the producer:** (brand)
1	**Optical Class:** (1= Continuous use)
B	**Mechanical resistance:** (B= Medium energy impact)
9	**Additional requirements:** (9= Resistance to splashes of molten metals and penetration of hot solids)

ORDER INFORMATION

CODE	DESCRIPTION	€
AGN020-441-3P0	VISIONSHIELD GOGGLES	27,00

SAFETY WRAPAROUND GLASSES

FEATURES

Moulded with soft rubber to increase grip and provide excellent comfort levels.

Polycarbonate lenses and frame ensure protection against low energy hi-speed particles.

Adjustable nose piece: the soft nose bridge is adjustable and provides high grip fitting that prevents slippage.

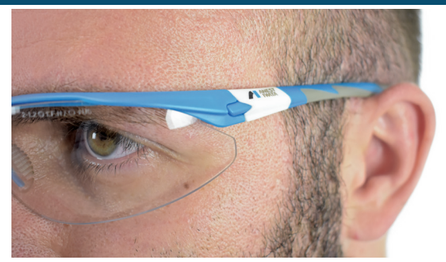

CONFORMS TO EN166:2001

Lens Marking: 2 - 1.2 xxx 1 F N	
2	**Radiation protection:** (2= UV filter)
1.2	**Gradation:** (1.2= Transparent)
XXX	**Identification of the producer:** (brand)
1	**Optical Class:** (1= Continuous use)
F	**Mechanical resistance:** (F= Low energy impact)
N	**Additional requirements:** (N= Fogging Resistance)

ORDER INFORMATION

CODE	DESCRIPTION	€
ASA770-15K-4P0	VISIONSHIELD GLASSES	20,50

VIPER HALF FACE GUARD MASK

HALF MASK with INTERCHANGEABLE COMBINED FILTERS

VIPER GUARD MASK

FEATURES
Full field of vision
Quick bayonet fittings
Secure fit
Large filter surfaces

The spectrum of action of harmful substances is large, then it is necessary identify with great precision the specific risks present in each workplace. The half mask respirators have two different types of filters that offer effective protection against dust, gases and vapors. Wearing protective masks and using them correctly can ensure an effective protection of the health against toxic substances.

Filters in two versions
A2P3R filter for high protection
AB1P2R filter for standard protection

Built-in inhalation valves in the filter
Low inhalation resistance

A2P3R HIGH PROTECTION COMBINED FILTERS

Medium Capacity Organic Gas/Vapours Filter (hydrocoarbons and solvents) - EN14387:2004

High Efficiency Particles Filter - EN143:2000 + A1:2006

Filter marking: A2P3R	
A2	(A = organic gas/vapours, bp >65°C) (2 = medium capacity)
P3R	(P = particulate filter) (3 = high capacity) (R= reusable)

AB1P2R STANDARD PROTECTION COMBINED FILTERS

Low Capacity Inorganic Gas/Vapours Filter (hydrocoarbons and solvents) - EN14387:2004

Medium Efficiency Particles Filter - EN143:2000 + A1:2006

Filter marking: AB1P2R	
AB1	(AB = inorganic gas/vapours, bp >65°C) (1 = low capacity)
P2R	(P = particulate filter) (2 = medium capacity) (R= reusable)

RESPIRATORY PROTECTION
DUST PARTICLES
MISTS Et FUMES
PAINTING ODOURS

CE 0086

ORDER INFORMATION

CODE	DESCRIPTION	QTY.	€
150001A0	VIPER GUARD MASK (A2P3R Half Face Mask)		61,50
150002A0	VIPER GUARD MASK (AB1P2R Half Face Mask)		64,30
VIUGVGM123	A2P3R FILTER SET	(2 pcs)	28,00
VIUGVGM510	AB1P2R FILTER SET	(2 pcs)	29,90
VIUGVGM002KIT	P2R PRE-FILTER SET	(4 pre-filters/2 holders)	9,50

AIRFED 2020 FULL FACE MASK

One of the biggest risks to the health of the human body is the inhalation of dust, paint mists, gases, vapors or other contaminants, which can be greatly hazardous to our health, even in small quantities. For this reason, it is of extreme importance to use masks to protect against respiratory aggressions that you can undergo during job in a saturated environment of toxic substances. ANEST IWATA offers exellent protections to always ensure your safety in all kind of environments. AIRFED 2020 FULL FACE MASK is functional and stylish. Suitable for use with previously filtered compressed air.

FEATURES
Very good all-round visibility with large visor
Head protection and comfort headband
Visor with quick-change protection film
Individually adjustable belt
Easily adjustable width adjustment
Adjustable fresh air regulator
5 micron filter
New Belt Unit including Whistle Warning
1.5m hose (inside diameter 8mm)
Supplied in Hygiene Box

CHIN GUARD

DIFFUSER

VIZOR PEEL

NAPE COVER

HYGIENE KIT

VISOR EN166:2001

Lens marking: 1F3	
1	**Optical Cass:** (1 = Continuous use)
F	**Mechanical resistance:** (F = Low energy impact)
3	**Specific use (risk types):** (3 = Resistance to chemical splashes)

HOSE/AIRLINE BREATHING APPARATUS EN14594:2005

Marking: LHD-3	
LHD	**Light, duty compressed air line helmet.**
3	**Class of performance (inward leakage):** (3 = maximum 0.5%)
NOTE: compressed Air Breathing Quality, must be Conforms to EN12021:2014	

ORDER INFORMATION

CODE	DESCRIPTION	REF.	QTY.	€
VIUAF2020KIT	**2020 AIR FED MASK**			434,50
VIUAF2020HEAD	2020 HEADPIECE ONLY	1		229,00
VIUAF2020/K10-SV	VISOR PEEL OFF COVERS	2	10 pcs.	33,50
VIUAF2020/K50-SV	TEARS OFFS		50 pcs.	52,00
VIUAF2020CHIN	CHIN GUARD AND FACESCREEN	3		53,95
VIUAF2020DIFF	DIFFUSER TUBE	4		75,00
VIUAF2101K5	HYGIENE KIT	5	5 pcs.	88,50
VIUAF2103K5	NAPE COVERS	7	5 pcs.	100,50
VIUAF2207	BELT REGULATOR	8		209,50
VIUAFG-N-AF-MC	5 MICRON FILTER	9		55,00
VIUAF2003	BELT ONLY			23,50
VIUAF2400	BRACKET ONLY			9,90
I-UK-AH008-FT26	STUB HOSE			35,00
VIUAF2010HRNS	ADJ HARNESS			19,00

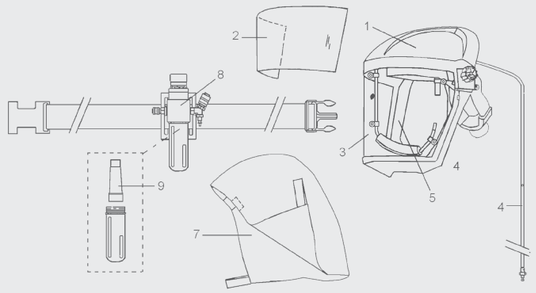

ANEST IWATA

CLEANING & MAINTENANCE

AIR QUALITY

PCA12.0 & HCA12.0 CLEANING APPLICATION

ANEST IWATA High Quality Atomizers are especially suited for automotive industry, motorcycle and bicycle garages, machine and metalworking industries and workshops.

FEATURES

High quality, robust pump spray bottle for quick cleaning of spray guns
Special, adjustable nozzle ø 0.8 mm (nickel-plated brass)
Powerful piston pump (nickel-plated brass) for an operating pressure up to 12.0 bar.
1 lt. capacity with large opening.
Level indicator and measurement scale.
Perfect stability.
Ergonomically shaped handle for easy operation.
PCA12.0 with solvent-resistant specialty gaskets (BMS 2010 black) for use with aggressive cleaners, resistant to all common solvents.
HCA12.0 with chemically resistant Viton seals (FKM (Viton) green) for use with mild cleaners, to 95% for cleaning of basecoat.

PREMIUM QUALITY PCA12.0

PREMIUM QUALITY Cleaning Applicator

AGGRESSIVE CLEANERS

with **SUPER SEAL BMS 201**

ORDER INFORMATION

CODE	DESCRIPTION	€
W2COM6226	**SPRAY GUN CLEANING APPLICATOR PCA 12.0 Premium Quality** (Super Seal BMS 210)	90,00

HIGH QUALITY HCA12.0

HIGH QUALITY Cleaning Applicator

MILD CLEANERS

with **VITON SEAL FPM**

MODELS	PCA 12.0	HCA 12.0
Chemical Resistance	Especially suitable for mineral oil respectively petroleum based products, which contain also Acetone (or similar solvents) and/or Alcohol.	Suitable for mineral oil based products, solvents, separating agents, wax products, emulsions and higher viscosity products. Not suitable for products containing acetone.
Tank Material	PE transparent white	
Gaskets	Special Gaskets BMS 210	Viton FPM
Pump	Nickel plated brass	
Weight (empty)	310 g	
Tank capacity	1 lt.	
Dimensions	H250 mm, Ø 120 mm	
Max. operating pressure	12 bar	
Temperature range	from 5° to 50° C	

ORDER INFORMATION

CODE	DESCRIPTION	€
W2COM6225	**SPRAY GUN CLEANING APPLICATOR HCA 12.0 High Quality** (Viton Seal FPM)	66,00

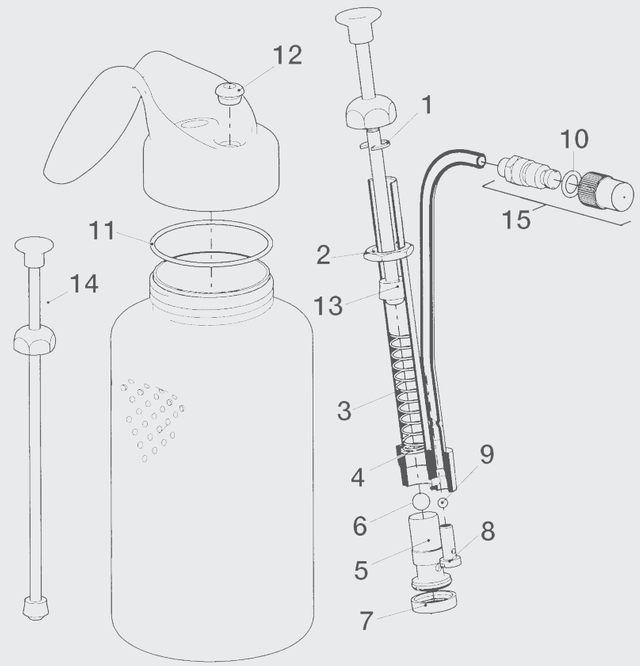

acids
alkalis
solvents
RESISTANT

SPARE PARTS

CODE	DESCRIPTION	REF.	€
W2KIT70	MAINTENANCE KIT		11,50
	PROTECTION WASHER	1	
	NUT	2	
	PRESSURE SPRING	3	
	WASHER	4	
	SUCTION VALVE	5	
	BALL 7/32"	6	
	SUCTION FILTER CPL.	7	
	PRESSURE VALVE	8	
	BALL 1/8"	9	
W2KIT71	PACKING SET - HCA (FPM - GREEN)		16,50
	O-RING 7,66x1,78	10	
	GASKET 57.5x53x2 PE	11	
	PRESSURE TUBE JOINT	12	
	SLEEVE	13	
W2KIT72	PACKING SET - PCA (BMS 210 - BLACK)		78,50
	O-RING 7,66x1,78	10	
	GASKET 57.5x53x2 PE	11	
	PRESSURE TUBE JOINT	12	
	SLEEVE	13	
W2KIT73	PISTON SET	14	20,50
W2KIT74	ADJUSTABLE NOZZLE SET Ø 0.8 mm	15	42,50

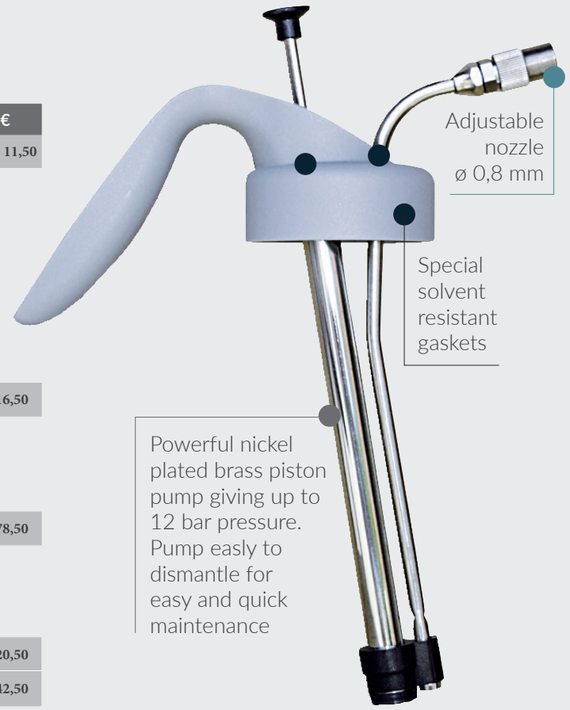

CLEANING & MAINTENANCE TIPS

DISASSEMBLING and CLEANING

Disassembly of fluid needle, fluid nozzle and air cap

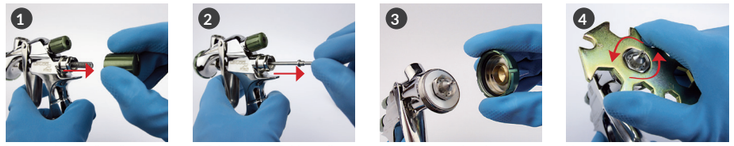

1. Remove the needle adjustment knob and needle spring
2. Take out the fluid needle
3. Take out the air cap
4. Unscrew and remove the fluid nozzle by the universal spanner

Cleaning and drying of the spray gun

NOTE
During the cleaning operation be sure to always use a compatible cleaner with the spray gun parts.

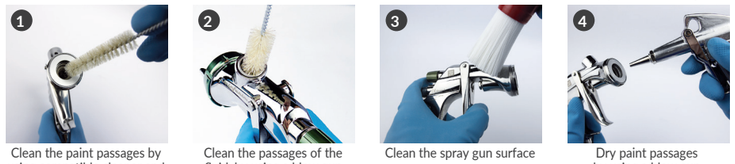

1. Clean the paint passages by using compatible cleaner and the twisted brush ø 10 mm
2. Clean the passages of the fluid, by using a blow gun and a twisted brush ø 10 mm
3. Clean the spray gun surface
4. Dry paint passages by using a blow gun

Cleaning of atomizing parts

1. Clean the fluid nozzle small holes with a tiny twisted brush ø 3 mm
2. Clean the central nozzle orifice with a tiny twisted brush ø 3 mm
3. Clean the tip of the fluid nozzle carefully with a brush
4. Clean carefully the nozzle threads with a brush
5. Clean smoothly the internal nozzle part, by using the most suitable brush size

6. Clean the air cap center hole with the most suitable twisted brush size
7. Clean the tiny air cap holes with the most suitable cleaning needles size
8. Clean the air cap horn holes with the most suitable cleaning needle size
9. Clean the rear air cap holes with the most suitable cleaning needle size
10. Clean the fluid needle with the most suitable brush

IMPORTANT. During the manual cleaning operations, be sure to never use any brushes with metal bristles, which could damage the internal parts or the surface of the spray gun.

ASSEMBLING

Assembling and maintenance

1. Assemble the fluid nozzle by hand
2. Tighten up the fluid nozzle by the universal spanner
3. Assemble the air cap, adjust it with the right orientation and tighten it by hand
4. Grease the needle
5. Insert the fluid needle in its seat

6. Grease the threads of fluid adjustment knob
7. Grease the needle spring sections and insert it in its seat
8. Grease the air valve bar behind the trigger
9. Adjust needle packing (15~60 degree tighten), by using the special spanner
10. Check if the trigger glide is smoothly.

IMPORTANT. The use of silicone-free Anest Iwata spray gun grease in maintenance operations, has proved to be a needful means to gurantee the perfect functionality of all moving parts and thread sections of the spray gun and to increase their resistance to wear.

CLEANING & MAINTENANCE TOOLS

THE KIT W2KITUK INCLUDES

2 Big Surface Brushes - 1 Flat Brush - 1 Big Twisted Brush - 3 Twisted Brushes (1x Ø 10 mm - 1x Ø 5 mm - 1x Ø 3 mm) 1 Tiny Twisted Brush - 12 Cleaning Needles Premier Maintenance Grease.

1

2 Flat Brushes
3 Brushes
4 Big surface brushes
5 Big twisted brushes ø 15
6 Twisted brushes ø 10
7 Twisted brushes ø 5

8 Tiny twisted brushes ø 3
9 Very tiny twisted brushes
10 Cleaning needles
11 Universal Spanner

12 Needle packing spanner
13 Allen wrench
14 Spanner for LPH-80/RG-3L

15 Maintenance Grease
16 AG-6 Air duster gun

ORDER INFORMATION

NR.	CODE	DESCRIPTION	QTY.	€
1	W2KIT55UK	SPRAY GUN MAINTENANCE TOOL KIT		60,50
2	W2COM6124	FLAT BRUSHES	(5 pcs./1pk.)	8,50
3	W2COM6163	BRUSHES	(5 pcs./1pk.)	11,00
4	W2COM6125	BIG SURFACE BRUSHES	(3 pcs./1pk.)	14,50
5	W2COM6126	BIG TWISTED BRUSHES ø 15mm	(5 pcs./1pk.)	15,00
6	W2COM6162	TWISTED BRUSHES ø 10mm	(5 pcs./1pk.)	13,00
7	W2COM6161	TWISTED BRUSHES ø 5mm	(5 pcs./1pk.)	11,00
8	W2COM6127	TINY TWISTED BRUSHES ø 3mm	(4 pcs./1pk.)	24,00
9	W2COM6128	VERY TINY TWISTED BRUSHES	(4 pcs./1pk.)	36,50
10	W2COM6164	CLEANING NEEDLES	(12 pcs./1pk.)	21,50
11	930171A0	UNIVERSAL SPANNER		7,00
12	W2COM6129	SPANNER FOR LOCK ADJ. & NEEDLE PACKING		5,50
13	03506480K	ALLEN WRENCH for Supernova series	(3 pcs./1pk.)	5,00
14	93280881	SPANNER for LPH-80/RG-3L		13,50
15	W2COM6165	PREMIER MAINTENANCE GREASE (20 ml)		6,00
16	13908061	AG-6 AIR DUSTER GUN		33,00

The bristles of all brushes are resistant to solvents and paint thinner and they are ideal to clean all types of spray guns.

MANUAL WASHING

KUIK MINI GUN WASHER

FEATURES

Kuik mini gun washer is a small, compact and unique water and solvent gun washer machine which is possible to be used inside or outside the spray booth and it is easy to be transported. The gun washer has separate nozzles for internal and external cleaning of the spray gun.
It is possible to pre-clean with dirty water or solvent and to do the final wash with clean water or solvent. The gun washer has an aspiration system to avoid that residual gasses remain trapped. An air blow gun is included.

TECHNICAL DATA	
OPERATING PRESSURE	8 bar
TANK CAPACITY	5 lt
DIMENSIONS	450x250x840 mm
MASS	15 kg

ORDER INFORMATION

CODE	DESCRIPTION	REF.	€
IWK-KUIK	KUIK MINI GUN WASHER MANUAL		2.002,00
10200135-4A	BLOWING GUN SUPPLY AIR HOSE + JOINT	4A	17,20
10200135-4D	LOW PRESSURE SUPPLY AIR HOSE (FOR SPRAY GUN) + JOINT	4D	17,20
10200135-5A	BLOWING GUN + JOINT	5A	63,20
10200135-5D	QUICK JOINT GUN CONNECTION	5D	22,60
10200135-9	INNER PRESSURE REGULATOR	9	41,60
10200135-11	LOWER DOOR	11	117,00
10200135-12	AIR INLET FITTING WITH FILTER	12	41,50
10200135-15	VAPOUR SUCTION NOZZLE	15	8,50
10200135-17A	CONTROL VENTURI PUMP SWITCH (DIRTY WATER)	17A	53,50
10200135-17D	CONTROL VENTURI PUMP SWITCH (DIRTY SOLVENT)	17D	53,50
10200135-18A	CONTROL ATOMIZER SWITCH (CLEAN WATER)	18A	53,50
10200135-18D	CONTROL ATOMIZER SWITCH (CLEAN SOLVENT)	18D	53,50
10200135-21A	VENTURI PUMP (DIRTY WATER AND DETERGENT)	21A	184,00
10200135-21D	VENTURI PUMP (DIRTY SOLVENT)	21D	184,00
10200135-22A	NEBULIZER (CLEAN WATER AND DETERGENT)	22A	96,80
10200135-22D	NEBULIZER (CLEAN SOLVENT)	22D	96,80
10200135-23A	NEBULIZER SUPPLY HOSE ZONE A	23A	8,50
10200135-23D	NEBULIZER SUPPLY HOSE ZONE D	23D	8,50
10200135-24A	VENTURI PUMP SUPPLY HOSE ZONE A	24A	8,50
10200135-24D	VENTURI PUMP SUPPLY HOSE ZONE D	24D	8,50
10200135-25	WORKTOP GRILLE	25	29,80
10200135-26A	DRAIN HOSE ZONE A	26A	11,00
10200135-26D	DRAIN HOSE ZONE D	26D	11,00
10200135-27A	TANK OF DIRTY WATER AND DETERGENT	27A	17,20
10200135-27D	TANK OF DIRTY SOLVENT	27D	17,20
10200135-28A	TANK OF CLEAN WATER AND DETERGENT	28A	17,20
10200135-28D	TANK OF CLEAN SOLVENT	28D	17,20
10200135-36	WASHING BRUSH	36	25,50
10200135-41	CONTROL SWITCH VAPOURS SUCTION	41	53,60
10200135-72	CONTROL PANEL LABEL	72	22,60
1020H2HRE5	AQUAREVIVE DETERGENT 5 lt.		169,30

Detergent AQUA **revive**
About 0,5 to 1,5 lt per 10 lt. of water

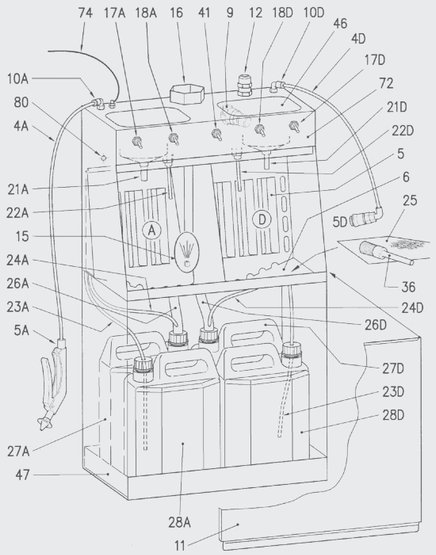

MANUAL WASHING

IWK-H2O GUN WASHER

FEATURES

IWK H2O FOR WATER BASED PAINT ONLY: a small and cost-effective pneumatically operated machine for manually washing water-based paint from spray guns and small objects. The instruments, located on the front section, make it easy to use. The spray-washer is fitted with a small pump and sprayer which draws clean water from a container located at the bottom of the machine and a second sprayer for final washing which is connected to the company's water supply.
A blowing gun then cleans and dries the guns and washed pieces.

TECHNICAL DATA	
OPERATING PRESSURE	6-10 bar
TANK CAPACITY	50 lt. (Stainless Steel)
TANK CAPACITY	70 lt. (lower tank)
DIMENSIONS	450x660x1335 mm
MASS	44 kg

SEPARATING THE PAINT FROM THE WATER: the stainless steel washing tank has an internal system that mixes the dirty water with flocculating powder. The water and coagulated colour deposit are then discharged by a valve in the fiter bag kit, where solid particles are separated from the water particles. The filtered water can be re-used for washing.

Detergent AQUA **revive**
About 0,5 to 1,5 lt per 10 lt. of water

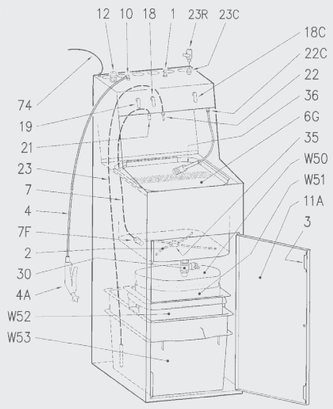

ORDER INFORMATION

CODE	DESCRIPTION	REF.	€
10200081	IWK H2O SPRAY GUN WASHER MANUAL		2.523,60
1020IWKH21	FLOW REGULATOR	1	39,20
1020IWKH23	DOOR MAGNET	3	11,60
1020IWKH24	AIR FEED HOSE	4	18,10
1020IWKH24A	BLOWING GUN	4A	67,10
1020IWKH26G	GRILLE	6C	146,30
1020IWKH224	PUMP SUPPLY HOSE	7	27,90
1020IWKH2H7F	PUMP SUPPLY FILTER	7F	67,20
1020IWKH211A	LOWER DOOR	11A	121,20
1020IWKH212	AIR INLET FITTING WITH FILTER	12	42,90
1020IWKH218K	CONTROL PANEL KIT WITH LEVER	18	131,30
1020IWKH218C	CONTROL VALVE KIT WITH LEVER	18C	40,40
1020IWKH218CL	ONLY CONTROL LEVER	18CL	5,30
1020IWKH221	PUMP	21	221,80
1020IWKH222	NEBULISER	22	83,20
1020IWKH222C	SPRAY NOZZLE	22C	17,80
1020IWKH223	NEBULISER SUPPLY HOSE	23	27,90
1020S3723R	WATER FLOW CONTROL VALVE	23R	31,10
1020IWKH230	DRAIN VALVE	30	41,70
1020IWKH235	AIR DIFFUSER	35	80,70
1020IWKH36	WASHING BRUSH	36	26,20
1020IWKH237	CONNECTION HOSE FOR WASHING BRUSH	37	14,70
1020IWKH2W50B	BAG PRE-FILTERS KIT (5 pcs./1pk.)	W50	53,60
1020IWKH2W51B	BAG FILTER	W51	39,40
1020IWKW52	CONTAINER (FILTERING +DECANTATION)	W52	103,80
1020IWKW53	CONTAINER (for REGENERATED WATER)	W53	121,00
1020S37T	SPRAY GUN NOZZLE	T	15,60
1020H2HRE5	AQUAREVIVE DETERGENT 5 lt.		169,30

CLEANING & MAINTENANCE

ANEST IWATA

MANUAL & AUTOMATIC GUN WASHERS

INOX LINE SOL (SLD)

Manual & Automatic Washing

FEATURES

Stainless steel Electroclean body and tank
Automatic wash with clean solvent rinse
Test booth and Venturi exhaust system
Drying gun
Possible to connect with a distiller

TECHNICAL DATA	
MASS	63 kg
OPERATING PRESSURE	6~10 bar
DIMENSIONS	600x700x1490 mm
EACH SINGLE TANK CPTY	25 lt.
NO OF GUNS WASHED PER CYCLE	2

ORDER INFORMATION

CODE	DESCRIPTION	€
10200S32	INOX LINE SLD MANUAL & AUTOMATIC GUN WASHER	4.653,20

INOX LINE SOL (ILD)

Gun Washer & Distiller

FEATURES

Totally pneumatic
Safety valve stops washer if wash chamber lid is opened during operation
Stainless Steel Electroclean Body and Tank
Automatic wash with clean solvent rinse
Test booth and Venturi exhaust system
Drying gun

TECHNICAL DATA	
MASS	180 kg
OPERATING TEMPERATURE	180 to 220°C
DIMENSIONS	730x1270x1390 mm
CPTY	12 lt
CYCLE TIME	3 ÷ 4.30 hrs
PROTECTION LEVEL	EEX od IIB
TEMPERATURE LEVEL	T2
POWER RATING	1,04 Kw

ORDER INFORMATION

CODE	DESCRIPTION	€
1020S322	INOX LINE GUN WASHER SLD with DISTILLER ILD	13.156,50

INOX LINE SOL-B / SOL-C

TECHNICAL DATA	
MASS	42 kg
OPERATING TEMPERATURE	6~10 bar
DIMENSIONS	600x700x1100 mm
EACH SINGLE TANK CPTY	25 lt.

ORDER INFORMATION

CODE	DESCRIPTION	€
10200125	IWK SLB GUN WASHER without AUTOMATIC FINAL CLEANING	2.705,40
10200120	IWK SLC GUN WASHER with AUTOMATIC FINAL CLEANING	3.230,20

SPARE **PARTS**

CODE	DESCRIPTION	REF.	SLB/C	SLD	€
1020S32189	FILTER CARTRIDGE ACTIVE CARBON				858,40
1020SOL0	LOWER DOOR	0	X		125,00
1020SOL3	DOOR MAGNET	3	X		13,40
1020S324	AIR FEED HOSE	4		X	18,20
1020SOL4	AIR FEED HOSE	4	X		18,70
1020S325	VAPOUR AND AIR CONVEYOR	5		X	95,40
1020S3211A	LOWER DOOR	11A		X	172,80
1020S3212	AIR INLET FITTING WITH FILTER	12		X	43,90
1020SOL12	AIR INLET FITTING WITH FILTER	12	X		45,20
1020S3213	PUSH-BUTTON	13		X	69,60
10200219	PUSH-BUTTON	13	X		69,60
1020S3214	TIMER	14		X	224,00
1020SOL14	TIMER	14	X		231,30
1020S3215	VAPOUR SUCTION NOZZLE	15		X	33,60
1020SOL15	VAPOUR SUCTION NOZZLE	15	X		9,30
1020S3216	VAPOUR EXHAUST PIPE	16		X	59,40
1020SOL16	VAPOUR EXHAUST PIPE	16	X		45,20
1020S3218	ATOMIZER CONTROL VALVE	18		X	56,80
1020SOL18BK	ATOMIZER CONTROL VALVE	18	X		69,20
1020SOL18L	LEVER	18	X		5,30
1020S3219	CONTROL VALVE PUMP	19		X	56,80
1020S3220	DRY FILTER	20		X	28,50
1020S3721	PUMP	21		X	195,40
1020S3722	NEBULIZER	22	X	X	102,70
1020S3223	NEBULIZER SUPPLY HOSE	23		X	28,50
1020SOL23	NEBULIZER SUPPLY HOSE	23	X		29,30
1020S3224	PUMP SUPPLY HOSE	24		X	28,50
1020SOL25	WORK SURFACE	25	X		77,40
1020S3229	HOSE (CLEAN SOLVENT)	29		X	74,90
1020SOL29	HOSE (CLEAN SOLVENT)	29	X		77,40
1020SOL29D	FILTER(CLEAN SOLVENT)	29D		X	18,50
1020SOL29F	FILTER (USED DETERGENT)	29F		X	64,10
1020S3229F	FILTER (USED DETERGENT)	29F		X	64,50
1020S3229S	HOSE (USED DETERGENT)	29S		X	85,10
1020SOL29S	HOSE (USED DETERGENT)	29S	X		87,30
1020SOL29F2	FILTER	29S	X		24,60
1020S3231	CLEAN DETERGENT PUMP	31		X	561,60
1020SOL31	CLEAN SOLVENT PUMP	31	X		96,20
1020S3232	USED DETERGENT PUMP	32		X	796,60
1020SOL32	AUTOMATIC WASHER PUMP	32	X		701,70
1020PA38K	COMPLETE INLET VALVE KIT	38-38A-39-40-41-43	X	X	56,80
1020S3239	SAFETY VALVE	39		X	85,10
1020SOL39	SAFETY VALVE	39	X		205,30
1020PA44K	COMPLETE OUTLET VALVE KIT	40-41-42-43-44	X	X	56,80
1020S3244	DRAIN HOSE	44		X	15,60
1020SOL44	DRAIN HOSE	44	X		16,10
1020S3247	COLLECTING TANK	47		X	170,20
1020SOL47	COLLECTING TANK	47	X		131,30
1020PA48K	COMPLETE DIAPHRAGM KIT	47-48-49-50-51	X	X	149,60
1020PA54K	PNEUMATIC VALVE COMPLETE	54-56-57-58	X	X	211,90
1020S3272	CONTROL PANEL ADHESIVE	72		X	33,60
1020S3274	EARTH WIRE	74		X	25,90
1020SOLD	DRILLED SCREW	D	X		29,30
1020SOLF	CUP SUPPORT	F	X		71,80
1020S32H	WASHING SUPPORT	H		X	56,80
1020SOLH	WASHING SUPPORT	H	X		66,60
1020SOLL1	INTERNAL SPRAYER	L/L1	X		46,90
1020S32M	ALUMINIUM HOSE KIT	M		X	384,00
1020SOLM	BRASS HOSE KIT	M	X		435,80
1020S32M1	CAPSTAN SCREW	M1		X	9,10
1020S32M2	CROSSPIECE JOINT	M2		X	38,70
1020SOLN	PROTECTION PLUG	N	X		5,30
1020PA46	STAINLESS STEEL SPRING	PA46	X	X	51,70
1020PA57	DISCHARGE SILENCER	PA57	X	X	12,40
1020PA58	AIR INLET FITTING	PA58	X	X	9,80
1020S32PQ	SPECIAL CLAMP	PQ		X	23,30
1020SOLPQ	SPECIAL CLAMP	PQ	X		23,30
1020S32R	NET KNOB IN ALUMINIUM	R		X	5,30
1020S32T	NOZZLE	T		X	15,60
1020SOLT	NOZZLE	T	X		12,70
1020S32U	ALUMINIUM NET	U		X	69,60
1020S32V	SPRAY NOZZLE	V		X	46,50
1020S32Z	INTERNAL SPRAY NOZZLE	Z		X	38,70
1020SOLZ	JET FOR SUCTION GUNS	Z	X		28,50
1020H2HRE5	AQUAREVIVE DETERGENT 5 lt.				169,30

SLD

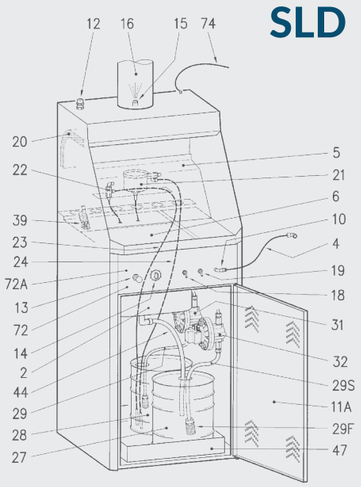

SLB - SLC

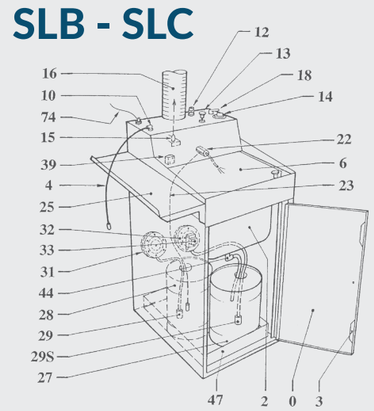

Pump PA

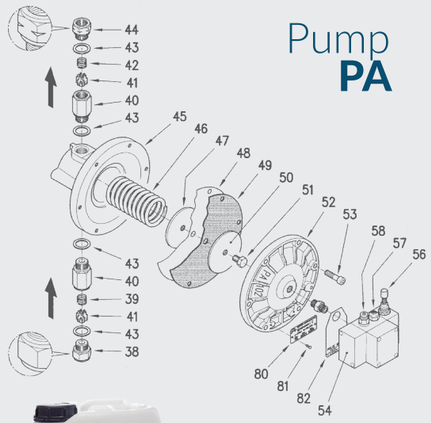

Detergent
AQUA **revive**

About 0,5 to 1,5 lt
per 10 lt. of water

SPRAY GUN SUPPORTS

MAGNETIC SUPPORT & GUN HOLDERS

MAG STAND - Magnetic Support

FEATURES

Practical for every bodyshop, fast, flexible and reliable adhesion on all metal surfaces thanks to an extra-strong all-surface magnet.

Hold up to 20 kg (each holder, measured on a clean metal surface).

No cumbersome, wall mount without screws and drilling.

Easy removal from spray both.

Prevent potential accidents.

Significant space savings in working area.

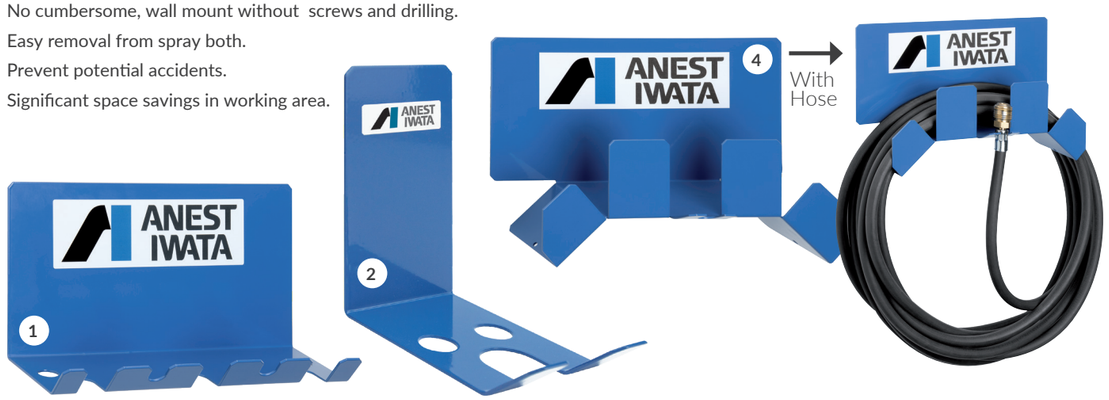

ORDER INFORMATION

CODE	DESCRIPTION	REF.	€
W2COM6052	MAGNETIC SPRAY GUN HOLDER (for 3 Spray Guns)	1	56,70
W2COM6120	MAGNETIC SPRAY GUN HOLDER (1 Single Spray Gun)	2	28,90
W2COM6093	MAGNETIC ADAPTOR HOLDER (for PPS-RPS Adaptors)	3	14,00
W2COM6094	MAGNETIC AIR HOSE HOLDER (Max. Hose lenght 20 m)	4	60,00

GRAVITY GUN HOLDERS

FEATURES

Suitable to hold Gravity Guns after use or during the filling of the cup.

Available in 3 versions with base:

- Single Central Gravity (wall mountable)
- Multiple Central Gravity (3 places)
- Single Side Gravity.

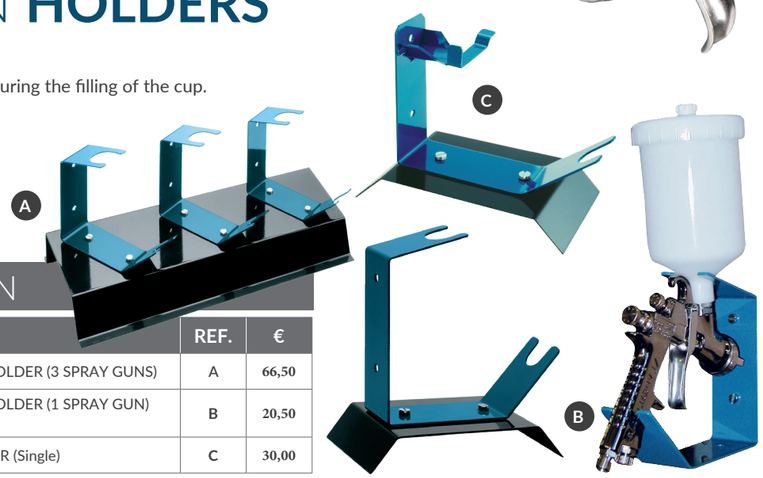

ORDER INFORMATION

CODE	DESCRIPTION	REF.	€
W2501000500	CENTRAL GRAVITY GUN HOLDER (3 SPRAY GUNS)	A	66,50
W2501000100	CENTRAL GRAVITY GUN HOLDER (1 SPRAY GUN) WALL MOUNTABLE	B	20,50
W2501000600	SIDE GRAVITY GUN HOLDER (Single)	C	30,00

SPRAY CONTROL

MAGNETIC SPRAY TESTER

FEATURES

Test the spray pattern with the portable magnetic Anest Iwata spray pattern tester and compare regularly compliant tabulated and efficiently the quality of the spray images.

Portable spray pattern tester for regular monitoring of the spray pattern quality

Fast, flexible and reliable adhesion of the spray pattern tester on all metallic surfaces thanks to an extra-strong full-surface magnet.

Easy wall mounting: no drilling, no screws.

Spray pattern tester lid opens downward for more freedom in the spray pattern test

Perfect horizontal alignment by an integrated vial in the spray ruler.

Dimensions: 46 cm (B) x 75 cm (H) x 5 cm (T)

with **SPRAY RULER** & LEVEL **VIAL**

MAGNETIC SPRAY TESTER

ORDER INFORMATION

CODE	DESCRIPTION	€
W2COM6118EN	MAGNETIC SPRAY TESTER (COMPLETE SET)	140,00
W2KIT51	PAPER BLOCKS (2 Blocks of 30 Sheets)	38,00
W2COM6151	LEVEL VIAL	4,00
W2COM6153	SPRAY RULER	26,50

HOW TO USE

CLEANING & MAINTENANCE

AIR FILTER REGULATORS 1/2”

SINGLE-STAGE

FEATURES

1 Inlet ball valve 1/2”F (allows removal of filter cartridge without stop compressor operation).
1 Filter Regulator: from 0 to 8.5 bar.
Filtration rating 5µ.
1 Pressure Gauge: from 0 to 10 bar.
1 Semi-automatic drain valve
(to prevent decompression during application).
2 Outlet ball valves 1/4”M, with stop valve.
1 Wall bracket with 2 mounting holes.
Filter body and bowl treated with anti-corrosion coated.
Max. flow rate: 2800 l/min.

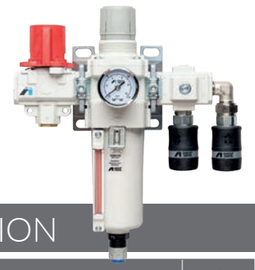

1/2” SINGLE-STAGE

ORDER INFORMATION

CODE	DESCRIPTION	€
DE120023	AIR FILTER REGULATOR 1/2”F - SINGLE-STAGE 5µ NM	399,00
D9250041	FILTRATION CARTRIDGE 5µ NM	15,50

DOUBLE-STAGE

FEATURES

1 Inlet ball valve 1/2”F (allows removal of filter cartridge
without stop compressor operation).
1 Filter 3 µ: filtration efficiency 99% with semi-automatic drain valve.
1 Air Regulator from 0 to 8.5 bar with pressure gauge from 0 to 10 bar.
1 Coalescence filter 0,01 µ: filtration efficiency 99,99%
with semi-automatic drain valve.
1 Outlet ball valves 1/4”M, with stop valve.
1 Outlet quick joint F.
1 Wall bracket with 4 mounting holes.
1 Saturation indicator.
Filter body and bowl treated with anti-corrosion coated.
Usable with 2 or 3 spray guns.
Max. flow rate: 1000 l/min.

1/2” DOUBLE-STAGE

ORDER INFORMATION

CODE	DESCRIPTION	€
DE120024	AIR FILTER REGULATOR 1/2”F - DOUBLE-STAGE	799,00
D9250052	FILTRATION CARTRIDGE 0,01 µ NM	101,00

TRI-STAGE

FEATURES

1 Inlet ball valve 1/2”F (allows removal of filter cartridge without stop compressor operation).
1 Filter 3 µ: filtration efficiency 99% with semi-automatic drain valve.
1 Air Regulator from 0 to 8.5 bar with pressure gauge from 0 to 10 bar.
1 Coalescence filter 0,01 µ: filtration efficiency 99,99%
with semi-automatic drain valve.
Active carbon filter with separation degree
<3.5 particles 0,3µ/l air.
1 Outlet ball valves 1/4”M, with stop valve.
1 Outlet quick joint F.
1 Wall bracket with 4 mounting holes.
1 Saturation indicator.
Filter body and bowl treated with anti-corrosion coated.
Usable with 2 or 3 spray guns.
Max. flow rate: 1000 l/min.

1/2” TRI-STAGE

ORDER INFORMATION

CODE	DESCRIPTION	€
DE120025	AIR FILTER REGULATOR 1/2”F - TRI-STAGE	1039,00
D9250052	FILTRATION CARTRIDGE 0,01 µ NM	101,00
D9250053	ACTIVE CARBON FILTER	122,50

CONDUCTIVE AIR/FLUID HOSES & COUPLINGS

PREMIUM ANTISTATIC AIR HOSE

FEATURES

High Quality ANTISTATIC AIR HOSE with high-strength synthetic textile braid. Available in 3 different lengths | 6 m - 10 m - 15 m
Clamped with fittings and safety quick coupling: air hose is vented in a first step and can then be safely disconnected in the second step
Very light, flexible in itself, noticeably handier
Quick coupling (NW 7.2) and nipple in Nickel Plated Brass
Conductivity: R<MOhm EN1953
Inner diameter ø 9 mm, outer diameter ø 15 mm
Max. operating pressure 15 bar
Weight with standard length of 10 m: 1,5 kg

ORDER INFORMATION

CODE	DESCRIPTION	€
00600916P	PREMIUM ANTISTATIC AIR HOSE (6 mt)	82,00
001000916P	PREMIUM ANTISTATIC AIR HOSE (10 mt)	107,00
001500916P	PREMIUM ANTISTATIC AIR HOSE (15 mt)	140,70

CONDUCTIVE TWIN HOSES

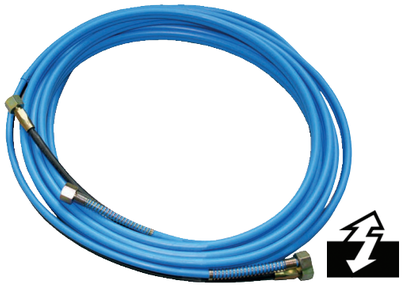

ORDER INFORMATION

CODE	DESCRIPTION	MT		CONNECTION	€
001004020	CONDUCTIVE TWIN HOSE	2	Air / Fluid	1/4”-1/4”	45,50
001004050	CONDUCTIVE TWIN HOSE	5	Air / Fluid	1/4”-1/4”	69,60
001004075	CONDUCTIVE TWIN HOSE	7.5	Air / Fluid	1/4”-1/4”	94,11
001004100	CONDUCTIVE TWIN HOSE	10	Air / Fluid	1/4”-1/4”	115,08
001004150	CONDUCTIVE TWIN HOSE	15	Air / Fluid	1/4”-1/4”	185,13

QUICK COUPLINGS

QUICK COUPLING AIR HOSE SET

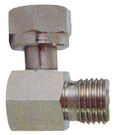

"L" ROTATING AIR HOSE JOINT

ORDER INFORMATION

CODE	DESCRIPTION	QT.Y	€
W2KIT41	QUICK COUPLING AIR HOSE JOINT (FR - small bore)	(5 pcs./1pk.)	25,50
W2KIT40	QUICK COUPLING AIR HOSE JOINT (DE - large bore)	(5 pcs./1pk.)	25,50
14375800	“L” ROTATING AIR HOSE JOINT	7.5	21,50

PRESSURE GAUGES

HVC AIR PRESSURE REGULATOR

HVC is a pressure regulator with manometer ideal precise and stable air pressure setting and for effortless setting control. Perfect for guns without digital readout and valid in ensuring optimal atomization even with HVLP technology. Clear number markings for convenient and easy reading with double reading scale in bar and PSI.

FEATURES

Air Pressure Gauge/Regulator
Joints G1/4”
Anodized aluminium body
Chrome plated steel gauge case
Glass clock face
Metal needle
Control range 0-6 bar (Pressure resistant up to 12 bar)

NEW

ORDER INFORMATION

CODE	DESCRIPTION	€
150003A0	HVC AIR PRESSURE REGULATOR	66,00

AFV-2 AIR PRESSURE REGULATOR

FEATURES

Air Pressure Gauge/Regulator
Quick Joints EU Standard
Chrome plated brass body
Chrome plated gauge case
Control range 0-6 bar
(Pressure resistant up to 12 bar)

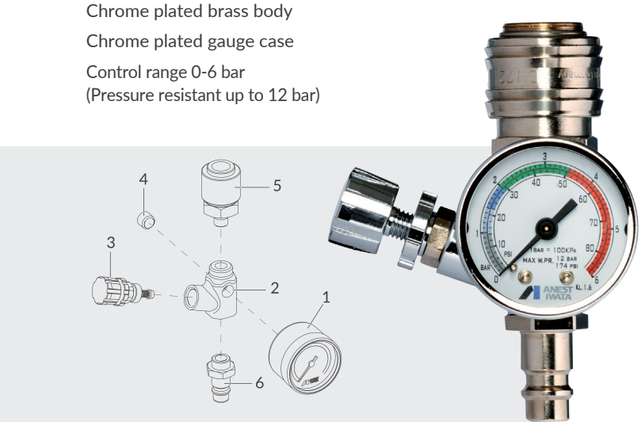

ORDER INFORMATION

CODE	DESCRIPTION	REF.	€
14378630	AFV-2 AIR PRESSURE REGULATOR		80,00
W3COM6065	PRESSURE GAUGE	1	19,95
94006231	BODY	2	27,00
94006240	AIR REGULATOR VALVE SET	3	24,50
96990425	PLUG	4	5,00
04006190	QUICK JOINT FEMALE (EU - Standard)	5	29,50
04006180	QUICK JOINT MALE (EU - Standard)	6	16,00

PRESSURE GAUGES

AFV-1 AIR PRESSURE REGULATOR

FEATURES

Air Pressure Gauge/Regulator
Joints G1/4”
Chrome plated brass body
Chrome plated gauge case
Control range 0-6 bar (Pressure resistant up to 12 bar)

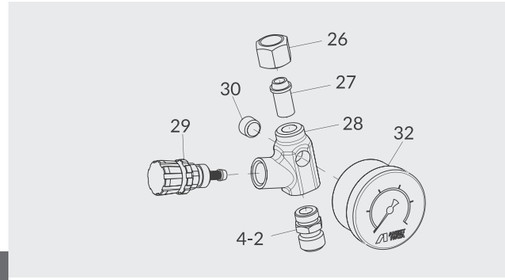

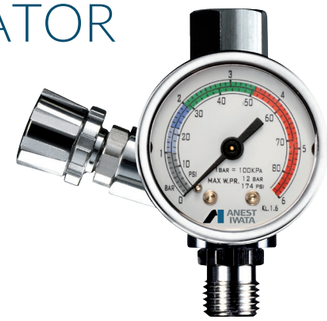

ORDER INFORMATION

CODE	DESCRIPTION	REF.	€
14378610	AFV-1 AIR PRESSURE REGULATOR		69,50
94017021	CAP NUT	26	5,50
94006220	JOINT SEAT	27	9,00
94006231	BODY	28	27,00
94006240	AIR REGULATOR VALVE SET	29	24,50
96990425	PLUG	30	5,00
W3COM6065	PRESSURE GAUGE	32	19,95

IMPACT CONTROLLER2

FEATURES

Air Pressure Gauge/Regulator
Joints G1/4”
Chrome plated aluminium body
Steel gauge case
Control range 0-10 bar

ORDER INFORMATION

CODE	DESCRIPTION	€
W2012920700	IMPACT CONTROLLER2 - AIR PRESSURE REGULATOR	46,00

ANEST IWATA

DRYING SYSTEM

drying SYSTEM

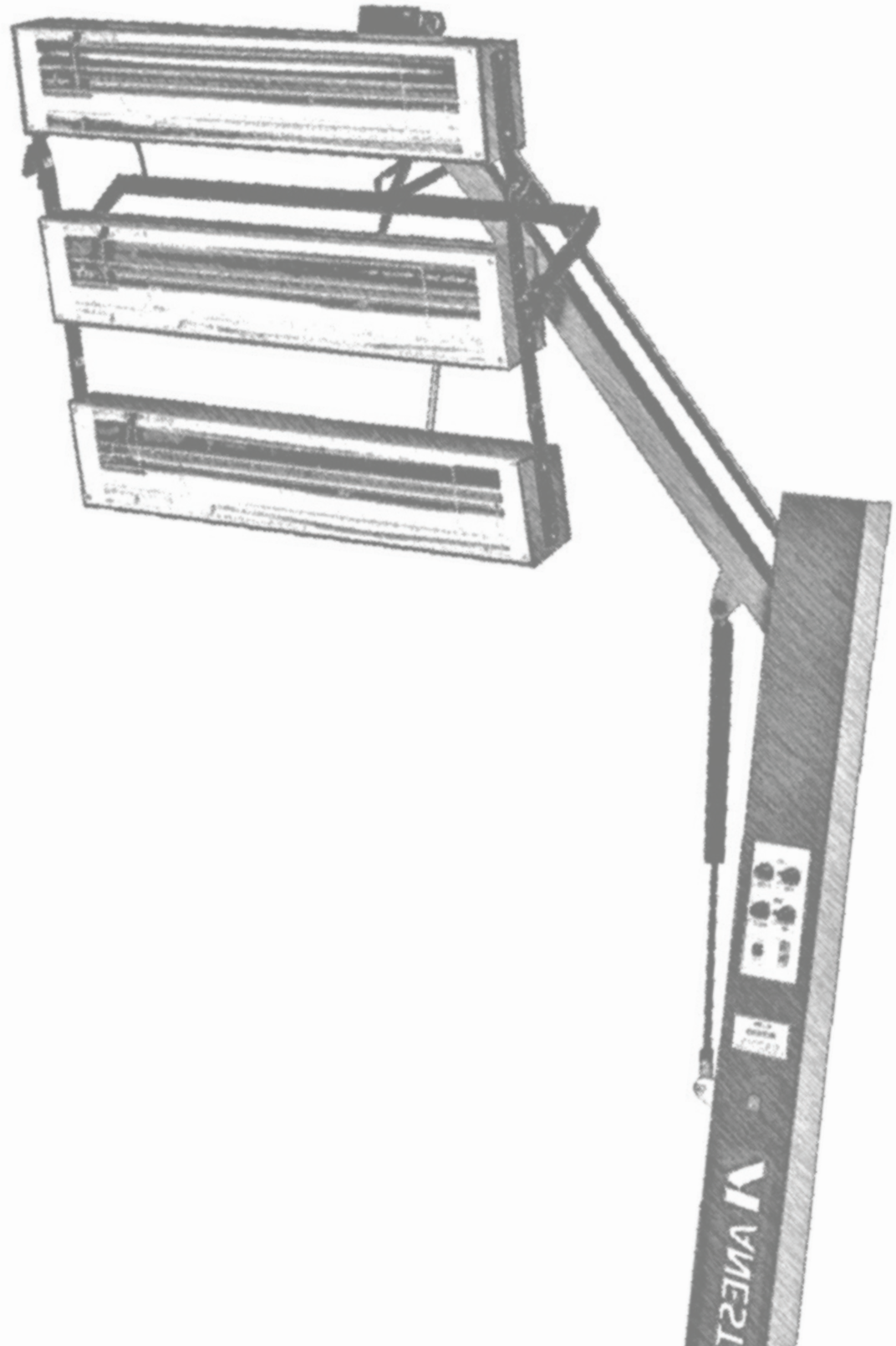

DRYING SYSTEM

INFRARED UNIT

FEATURES

The use of short wave infrared technology enables body filters, primers and paints to be cured in 10 minutes as opposed to 45 minutes in an oven. Anest Iwata infrared mobile drying systems provide a fast efficient answer for all your local body repairs. Infrared units are a cost effective method of paint drying, and curing can be achieved in just minutes, using the highly effective short wave infrared lamp. Anest Iwata infrared units are available in a number of options.

SERIES
1 Kw

SERIES
3-4.5 Kw

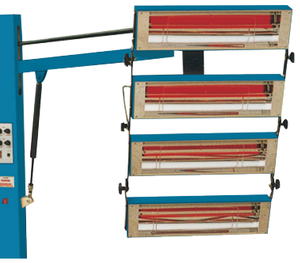

SERIES
4 Kw

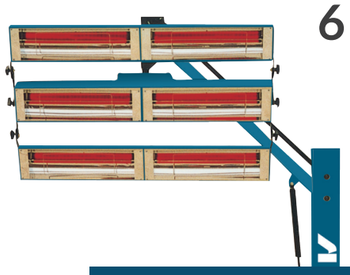

SERIES
6 Kw

ORDER INFORMATION

CODE	DESCRIPTION	€
HEAT T.E.C. 1000 (1 Kw Series)		
VIU100000	HAND HELD MODEL	506,60
VIU100010	HAND HELD MODEL WITH SEPARATE STAND	552,00
VIU100010T	HAND HELD MODEL WITH SEPARATE STAND + TIMER	703,40
VIU100020	2 HAND HELD MODEL WITH ONE STAND	1.104,90
VIU100020T	2 HAND HELD MODEL WITH SEPARATE STAND + TIMER	1.138,50
HEAT T.E.C. 3000 (3 Kw Series) Coverage Area 800x1000 mm		
VIU100030	MOBILE INFRARED UNIT	3.024,70
VIU100030DSTS	MOBILE INFRARED UNIT + DISTANCE & TEMPERATURE SENSOR	4.077,50
HEAT T.E.C. 4000 (4 Kw Series) Coverage Area 800x1300 mm		
VIU100040	MOBILE INFRARED UNIT	3.360,00
VIU100040DSTS	MOBILE INFRARED UNIT + DISTANCE & TEMPERATURE SENSOR	4.043,90
HEAT T.E.C. 4500 (4.5 Kw Series) Coverage Area 1250x1000 mm		
VIU100045	MOBILE INFRARED UNIT	3.201,00
VIU100045DSTS	MOBILE INFRARED UNIT + DISTANCE & TEMPERATURE SENSOR	4.253,9
VIU300045	MOBILE INFRARED UNIT (THREE-PHASE)	3.360,00
VIU300045DSTS	MOBILE INFRARED UNIT + DISTANCE & TEMPERATURE SENSOR	4.413,00
HEAT T.E.C. 6000 (6 Kw Series) Coverage Area 2000x1000 mm		
VIU100060	MOBILE INFRARED UNIT	4.545,00
VIU100060DSTS	MOBILE INFRARED UNIT + DISTANCE & TEMPERATURE SENSOR	7.426,71
VIU100060DSTS	MOBILE INFRARED UNIT (THREE-PHASE)	5.491,00
VIU300060DSTS	MOBILE INFRARED UNIT + DISTANCE & TEMPERATURE SENSOR	6.549,00

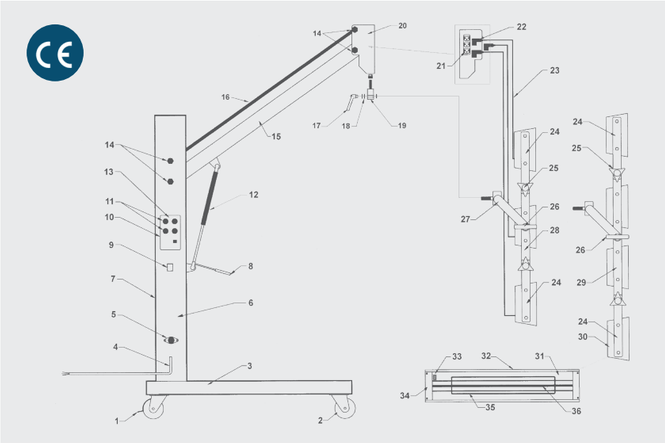

INFRARED UNIT

ANEST IWATA

			220/240 Volt				380/415 Volt		
REF.	CODE	DESCRIPTION	3 KW	4 KW	4.5 KW	6 KW	4.5 KW	6 KW	€
1	VIU991594	CASTOR WITH BRAKE	2	2	2	2	2	2	54,60
2	VIU991595	CASTOR WITHOUT BRAKE	2	2	2	2	2	2	53,60
3	VIU410010B	U BASE (NO CASTORS)	1	1	1	1	1	1	697,30
4	VIU40001L	MAIN CABLE WITHOUT PLUG (240V 3KW/4KW/4.5KW)	1	1	1				133,70
4	VIU60001L	MAIN CABLE WITHOUT PLUG (240V 6KW)				1			151,00
4	VIU630001L	MAIN CABLE WITHOUT PLUG 3 PHASE					1	1	151,00
5	VIU363741	TRIAC POWER CONTROL	1	1	1	1	3	3	93,00
6	VIU410042	FRONT PANEL METAL COVER ONLY	1	1	1	1	1	1	355,30
7	VIU410100B	MAIN UPRIGHT (METAL PART ONLY)	1	1	1	1	1	1	772,30
8	VIUGSL	GAS STRUT LEVER	1	1	1	1	1	1	20,70
9	VIU41059EUR	MAIN SWITCH 3/4/4.5 KW SINGLE PHASE	1	1	1				51,20
9	VIU311-5256	MAIN SWITCH 6 KW SINGLE PHASE WITHOUT KNOB				1			162,60
9	VIU350-0840	KNOB FOR 6KW SWITCH					1	1	52,40
9	VIU332-155	MAIN SWITCH 6KW 3 PHASE				1			213,70
10	VIUHLPPCB-DS	DISTANCE CIRCUIT BOARD MODELS 220/240V	1	1	1	1			575,90
10	VIUHLPPCBXL	TEMP. + DISTANCE CIRCUIT BOARD MODELS 240V	1	1	1	1			1.316,20
10	VIUHLPPCBXL-P	TEMP. + DISTANCE HEAD CIRCUIT BOARD ALL MODELS	1	1	1	1	1	1	499,80
10	VIUHLPPCB	CIRCUIT BOARD SINGLE PHASE	1	1	1	1			859,40
10	VIUHLPPCB-3	CIRCUIT BOARD THREE PHASE					1	1	929,00
11	VIU320295	BLACK KNOB FOR CONTROL CIRCUIT BOARD	4	4	4	4	4	4	4,10
12	VIUGS	GAS STRUT ONLY 3/4/4.5 KW (WITHOUT LEVER)	1	1	1				382,90
12	VIUGSA	GAS STRUT ONLY 6 KW (WITHOUT LEVER)				1		1	499,80
13	VIU410051B	CONTROL PANEL LABEL AI	1	1	1	1	1	1	21,90
14	VIU009NC	NUT CAP M12	8	8	8	8	8	8	3,50
15	VIU410099B	TOP SUPPORT ARM	1	1	1	1	1	1	205,30
16	VIU410098	TOP TIE BAR (ALL MODELS)	1	1	1	1	1	1	167,30
17	VIU410078	RATCHET HANDLE	1	1	1	1	1	1	37,30
18	VIUM12WSET	WASHERS FOR CASSETTE SUPPORT LOCKING HANDLE	1	1	1	1	1	1	3,40
19	VIU410017	SWIVEL BLOCK	1	1	1	1	1	1	115,90
20	VIU410018	HEAD	1	1	1	1	1	1	232,30
21	VIU410020	QUAD BLOCK SOCKET SINGLE PHASE MODELS	1	1	1	1			61,70
21	VIU23-0117	QUAD BLOCK SOCKET 3 PHASE MODELS					3	3	21,90
22	VIU410061	KETTLE PLUG	3	4	3	3	3	3	23,30
23	VIU10005	CASSETTE CABLE ASSEMBLY C/W PLUG	3	4	3	3	3	3	51,20
24	VIU410076	UNIVERSAL OUTER STRAP	4	4	4	4	4	4	48,90
25	VIU410077	TRI KNOB	4	4	4	4	4	4	6,30
26	VIU411200	T KNOB	2	2	2	2	2	2	7,30
27	VIU410080	OVERHEAD CASSETTE SUPPORT ARM 3KW/4KW	1	1					259,30
27	VIU450012	OVERHEAD CASSETTE SUPPORT ARM 4.5KW				1		1	398,40
27	VIU410073	OVERHEAD CASSETTE SUPPORT ARM 6KW			1		1		328,80
28	VIU410075	CENTRE STRAP 3 HEAD	2		2	2	2	2	43,10
29	VIU410003	CENTRE STRAP 4 HEAD		2					55,10
30	VIU410074B	BLUE CASSETTE BOX ONLY 3/4/6KW (EMPTY)	3	4		6		6	321,70
30	VIU450011B	BLUE CASSETTE BOX ONLY 4.5 KW (EMPTY)			3		3		387,30
31	VIU410071	BACK REFLECTOR 3/4/6 KW	3	4		6		6	52,40
31	VIU450016	BACK REFLECTOR 4.5 KW			3		3		72,40
32	VIUHLP34CSAA	CASSETTE ASSEMBLY COMPLETE (NO LAMP) 3/4 KW	3	4					859,40
32	VIUHLP4500CAA	CASSETTE ASSEMBLY COMPLETE (NO LAMP) 4.5 KW			3		3		929,00
33	VIU410081	CASSETTE ON/OFF SWITCH	3	4	3	6	3	6	26,80
34	VIU420070	END REFLECTOR	6	8	6	12	6	12	19,80
35	VIU410069	CASSETTE GUARD 3/4/6 KW	3	4		6		6	25,70
35	VIU450013	CASSETTE GUARD 4.5 KW			3		3		36,10
	VIU900300	1KW TUBE 300 MM 220/240 VOLT							191,70
36	VIU900500	1KW TUBE 500 MM 220/240 VOLT	3	4		6		6	238,10
36	VIU900750	1.5KW TUBE 750 MM 220/240 VOLT			3		3		284,70
	VIU101	HAND HELD STAND WITH SLIDER BRACKET							395,00
	VIU103	TIMER ONLY FOR STAND MOUNTED							371,80
	VIU104	PLUG FOR STAND MOUNTED TIMER (EACH)							24,60
	VIU404	CONTROL BOARD FOR DISTANCE SENSOR MODELS							1.302,90
	VIU406	DIGITAL READ OUT PANEL FOR DISTANCE SENSOR							574,80
	VIU408	DIGITAL SENSOR UNIT							673,00
	VIU410014	BOLT FOR CASTOR M10							1,00
	VIU410015	NUT FOR CASTOR M10							0,80
	VIU410016	LOCKING WASHER FOR CASTOR M10							0,60
	VIUFS500M	FUSE 500 MA							1,80
	VIU102	SLIDER BRACKET FOR HAND HELD							61,70
	VIUHAN1	HANDLE FOR HAND HELD							47,70
	VIUGRP1	GRIP FOR HAND HELD MODEL							8,80
	VIU10001	HAND HELD CABLE WITHOUT PLUG							52,40

ADG-1B AQUADRY PAINT DRYER GUN

AQUADRY KIT IS A VERSATILE SYSTEM TO SPEED UP THE DRYING PROCESS OF WATER BASED COATINGS

Its exclusive configuration provides an extremely uniform air flow system, which considerably reduces the drying time of the painted surfaces, thanks to the considerable acceleration of the water evaporation contained in the paints. The control of the air volume produced by the gun is about 6 times its air consumption. The use of a single device is particularly suitable for small areas, while the system mounted on the stand is particularly suitable for larger surfaces and commercial vehicles.

FEATURES

Guns are provided with quick couplings which allow fast disassembly

Air regulator included

2 Guns are easily and independently adjustable (height from 0 to 210 cm)

Each gun can be used independently

The stand has a slide and lock height adjustment.

Gun brackets can be moved along the length of the arm and positioned to suit, max adjustable 80 cm

Sturdy and dismountable steel base with rubber foot 62x62 cm

Venturi air entrainment increases air flow by 6:1

TECHNICAL DATA

Max. pressure: 7 bar

Max. air consumption: 2 x 600 lt./min

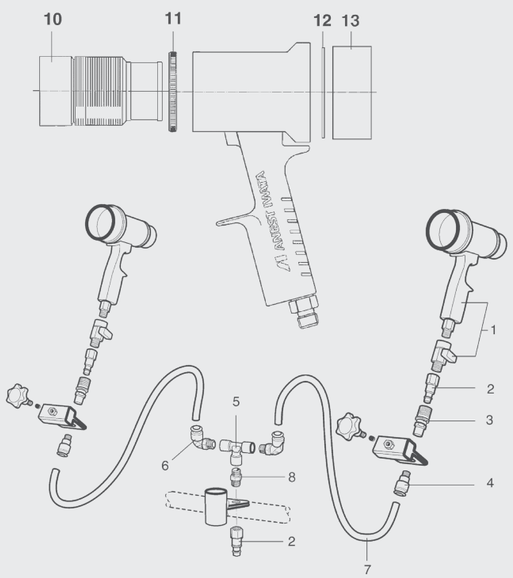

ORDER INFORMATION

CODE	DESCRIPTION	REF.	€
UIKIT60100	AQUADRY SET (STAND, HOSES + 2 DRYER GUNS)		507,00
13908402	AQUADRY PAINT DRYER GUN ADG-1B	1	131,50
W2COM6096	QUICK JOINT MALE BRASS G-1/4"M	2	4,00
W2950291400	QUICK JOINT FEMALE BRASS G-1/4"F	3	11,00
UL300312	QUICK JOINT 1/4" M - ø10	4	6,00
UL300300	"T" JOINT 1/4" FFF	5	7,00
UL300309	"L" QUICK COUPLING 1/4" M - ø10	6	6,50
00100032	AIR HOSE 10X8	7	3,00
UL30010501	SPECIAL NIPPLE R. 1/4"- G1/4"	8	3,50
VIEAQ002	STAND ONLY	9	201,50
93453450	NOZZLE	10	81,00
93454450	NUT	11	21,50
93451460	SCREEN FILTER	12	11,00
93455461	COVER	13	21,50

AI JET FLAT AIR NOZZLE DRYER

FEATURES

The AI JET Flat Fan Air Nozzles series are ideal to be used for the processes of drying and curing of water-based paints.

The flow of compressed air, passes through the nozzle and it is distributed through 16 holes (ø 1.5 mm), ensuring a wide range of air distribution and an excellent uniformity in the drying process.

The ergonomic design and its small dimensions, allow its use even in very small spaces.

The use of the AI JET air nozzles reduces the consumption of compressed air than other systems and allows the drying process in shorter times on surfaces of small and medium size, as well as a considerable reduction in noise.

AI JET is supplied with ball valve and quick coupling joint M.

TECHNICAL DATA

Noise Level: 70 db (A) at 2 bar

Air Consumption: 18 m³/h at 2 bar

Max. Pressure: 6 bar

Max. Temperature: 50°C

Pattern of **DISTRIBUTION** through **AIJET** Nozzle Holes

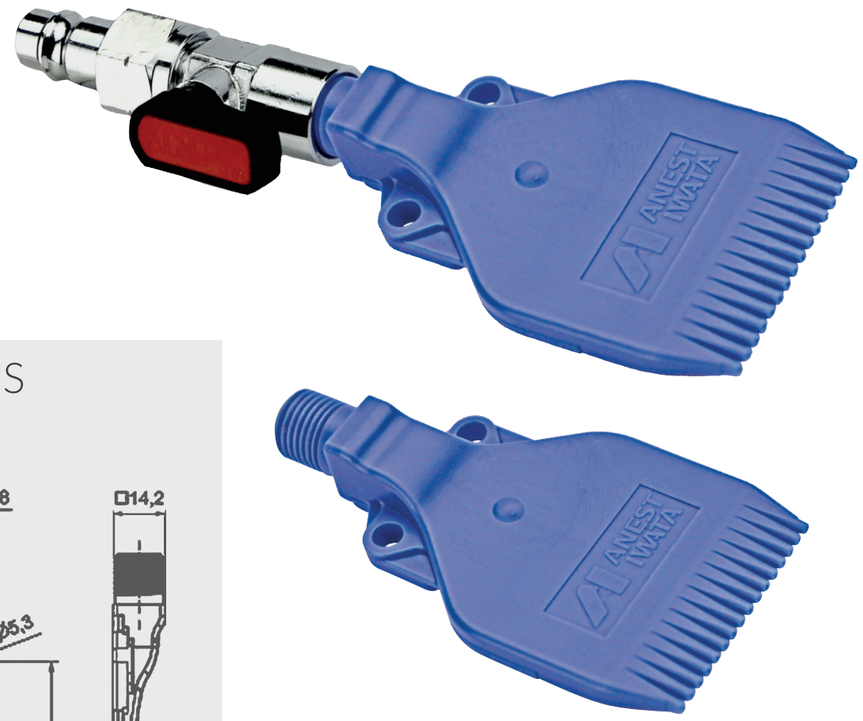

AIR NOZZLE

DIMENSIONS

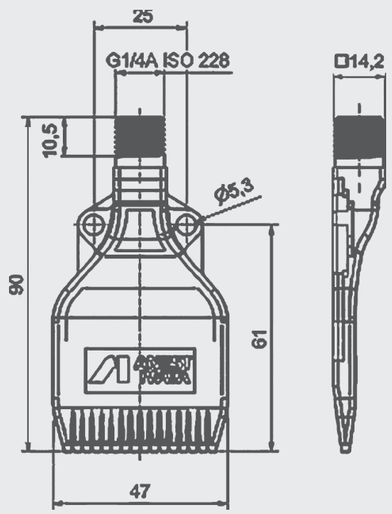

ORDER INFORMATION

CODE	DESCRIPTION	€
W2COM6214	AI JET AIR NOZZLE DRYER SET	37,00
W2COM6235	AIR NOZZLE	27,50
W2KIT40	QUICK COUPLING JOINT SET M1/4" F (5 pcs./1 pk.)	25,50

DEMO TOOLS

DEMO TROLLEY

ANEST IWATA Demo trolley is a practical and lightweight trolley to tow, perfect for protecting your valuable tools. Externally is made of sturdy and shockproof plastic material, durable but lightweight with a professional design. The inside is a foam lined safe housing which can snuggly fit five spray guns. In addition, there are spaces cut out of foam designed to preserve the enclosures that can contain both the fluid nozzle and needle sets and the air cap sets, such as: 15 rotating telescopic enclosures to protect fluid needles and fluid nozzles and 7 enclosures with lid to protect the air caps.

FEATURES

Demo trolley is flexible to be equipped and also suitable for spray guns and accessories from other manufacturers, it is structured with:

5 places for spray guns

2 places for mini spray guns

2 places for pressure gauges

1 place for gravity cup 70 ml

1 big place with a shapeable foam for bulky items (as gravity cups or cleaning tools)

TECHNICAL DATA

Dimensions: 604 (W) x 473 (D) x 283 (H) mm

Empty weight: 9 kg

IP 67 classification; 100% recyclable material

ORDER INFORMATION

CODE	DESCRIPTION	€
VPATR-IW01	DEMO TROLLEY CASES KIT	427,00
VROTRPACK	CASES KIT SINGLE (22 parts)	40,00

Spray guns are not included in Demo trolley.

CASES KIT

15x

7x

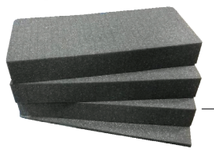

7x Case

15x Telescopic twist **case** for nozzle/needle

5x Spray guns

2x Small **Spray guns**
2x Pressure Gauges
1x Gravity cup 70 ml

Flexibly equipped
Gravity cups & Cleaning kits
Bulky parts
Shapeable foam

OTHER ACCESSORIES

AZ PVA TN UNDERCOAT SPRAY GUN

FEATURES

Undercoat gun to be used with pre-packed paintpot or cartridge

With suction feed

Internal mixing

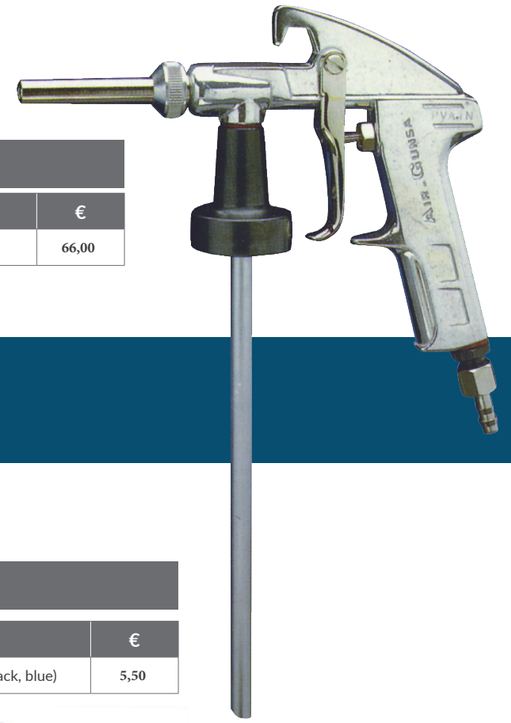

ORDER INFORMATION

CODE	DESCRIPTION	€
W0012200000	UNDERCOAT SPRAY GUN	66,00

MARKER CAPS

FEATURES

Marker caps for individual labeling of spray guns

ORDER INFORMATION

CODE	DESCRIPTION	€
93710530	MARKER CAPS (5 pcs./1 pk.) (yellow, green, red, black, blue)	5,50

PAINTING TIPS

SPRAY GUN & **NOZZLE CHOICE**

Anest Iwata with the most important paint manufacturers determines the best spray guns settings and the nozzle choice according to paints and models. To find the most suitable nozzle diameter and air inlet pressure, you can refer to the recommendations listed in the technical details of each product page.

ATOMIZING & **AIR PRESSURE** ADJUSTING

Install the pressure gauge to the air inlet pressure control of the spray gun. Then connect the spray gun to the supply of the compressed air.
WARNING: To supply compressed air to the spray gun, always use clean air filtered through an air dryer and an air filter.

Fully open the pattern adjustment valve and the air flow control valve.
NOTE: The air flow control valve must not be used, except when you want to reduce the pattern width.

Keep the trigger fully hold during adjustment. Adjust pressure by the main air regulator of the spray booth, making sure that the pressure value on the pressure gauge under the gun is correct.

FLUID OUPUT ADJUSTING

The adjustment of fluid output can be left completely open and adjusted by opening and closing the trigger during painting operations.
Some paint manufacturers recommend to adjust the fluid output based on the number of turns of the fluid-adjustment knob and in this case, the recommendations must be strictly observed.

SPRAY GUN **USE**

The spray gun must be always held perpendicular to the surface that has to be painted. When painting, the spray gun should be moved with a fluid and free motion of the arm, in a horizontal and straight line from right to left and back so that each passage covers the previous one by 50-75%. The molded parts, the edges and the interior of the car should be painted first.

SPRAY **DISTANCE**

The spray distance of the gun from the surface must be between 130 - 200 mm: set the spraying distance as close as possible to this range. With Supernova spray guns the recommended spraying distance must be between 130 -150 mm.
Anest Iwata provides a Magnetic Spray Tester, which is an accessory to test the quality of spray the pattern.

SAFETY **PROTECTION**

During painting operations always wear protective gear such as safety glasses, mask, overalls, gloves and so on, to avoid inflammation of eyes and skin. Anest Iwata offers a wide range of health protection devices available in the accessories section in the Price List.

CLEANING & **MAINTENANCE**

Before spray gun use, adjustments or maintenance, it is important to read very carefully the instruction manual supplied with the spray gun. Instructions for cleaning and maintenance are also displayed on the front panel of the Magnetic Spray Tester.

SALES CONDITIONS

ANEST IWATA

THIS PRICE LIST IS VALID FROM 01 01 2021

PRICING

All mentioned prices are ex-works in Cardano al Campo. Transportation or delivery charges are not included in the shown price. Terms and Conditions apply. All prices are recommended retail prices: VAT is not included. For invoices below 50 € (NET), no discount is applied.

COMPLAINTS

For complaints please contact us:
e-mail: info@anest-iwata-st.com
telephone: +39 0331 73 31 20

GOODS EXCHANGE RETURNS

Goods exchange and returns must be notified to Anest Iwata in advance (before shipment). These, will be accepted only and exclusively if Anest Iwata has given the approval.

The returned goods must be unused, in perfect conditions, undamaged and with the original packaging. Used goods are generally not accepted.

Anest Iwata is not responsible for errors or omissions contained in its price lists or promotional material. All prices/items/designs are subjected to changes without previous notice.

SUPERSEDED PRODUCTS

SPARE PARTS

W-200 PRESSURE and SUCTION **SERIES**

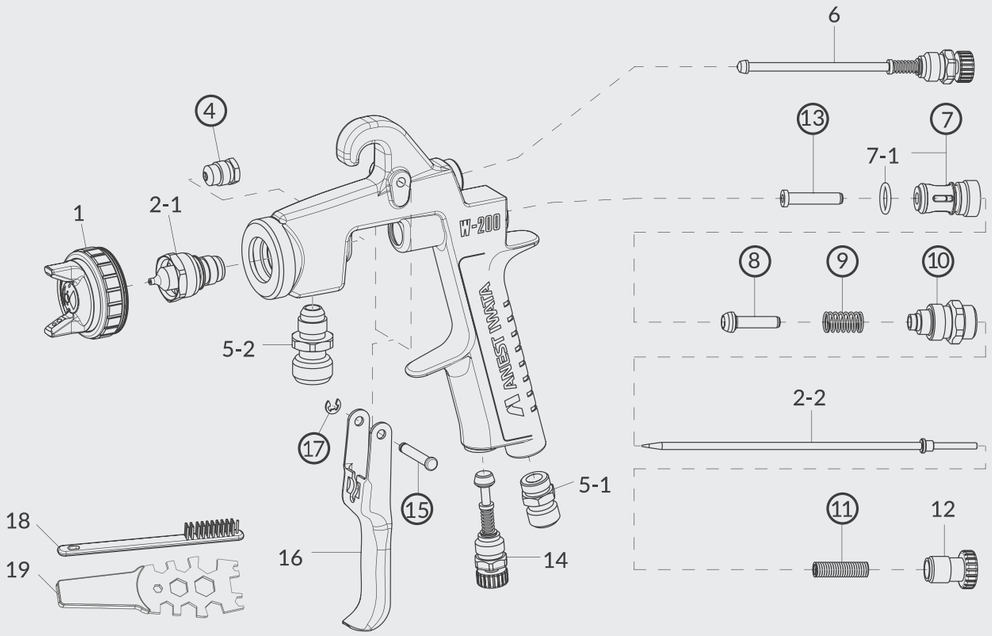

ORDER INFORMATION

W-200 PRESSURE **SERIES**

W-200 WB	ø 0,8	ø 1,0	ø 1,2	ø 1,4		€
AIR CAP SET (WBS1)	93640620					105,50
AIR CAP SET (WB1)	93609620					107,00
FLUID NOZZLE + FLUID NEEDLE SET	93606620	93612620	93616620	93643620		191,00

W-200	ø 0,8	ø 1,0	ø 1,2	ø 1,5		€
AIR CAP SET G2P	93818610B			-		95,00
AIR CAP SET - LV2	93830610B					95,00
FLUID NOZZLE + FLUID NEEDLE SET	93889610	93890610	93891610	-		97,50
FLUID NOZZLE + FLUID NEEDLE SET	-	-	-	93822610		97,50

W-200 SUCTION **SERIES**

W-200 WB	ø 0,6	ø 1,8		€
AIR CAP SET (WB2)	93624620			95,00
FLUID NOZZLE + FLUID NEEDLE SET	93622620	93635620		121,50

W-200	ø 1,4	ø 1,5	ø 1,8	ø 2,0	ø 2,0	€
AIR CAP SET	**LV2**-93830610B	**K2**-93816610B		**R2** 93814610B	**W1**-93816310B	95,00
FLUID NOZZLE + FLUID NEEDLE SET	93831610	93822610	93821610	93820610	93819610	97,50

ORDER INFORMATION

PCL-10B3

Suction Container 1lt.

PC-12

Suction Container 1lt.

Push Pull Pattern Adjustment Set

Quick Fan Pattern Control

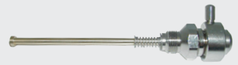

Fluid Tube

REF.	CODE	DESCRIPTION	QTY.	€
2-2	93507700	SPECIAL NEEDLE with TIP in Delrin	ø 0.8/1.0/1.2	96,50
	W-200-X17-1	NEEDLE TIP in Delrin	ø 0.8/1.0/1.2	18,00
4	93810620	NEEDLE PACKING SET		25,85
5-1	03660300	AIR NIPPLE		9,50
5-2	03515600	FLUID NIPPLE		22,50
6	93840601	PATTERN ADJ. SET		39,00
7	03843530	AIR VALVE SEAT		24,00
7-1	06638008	'O'RING		2,50
8	03591530	AIR VALVE		16,50
9	03719530	AIR VALVE SPRING		7,00
10	93844532	FLUID ADJ. GUIDE SET		36,50
11	03593530	FLUID NEEDLE SPRING		7,00
12	93594532	FLUID ADJ. KNOB		14,50
13	93935430	AIR VALVE SHAFT		13,00
14	93845531	AIR ADJ. SET		36,50
14-1	93625370	PLUG (W200 S)		23,00
15	03667360	TRIGGER STUD		4,00
16	03517600	TRIGGER		17,00
17	03912030	E STOPPER	(2 pcs./1 pk.)	3,50
18	W2COM6163	BRUSHES (5 PCS/1 PK)		11,00
19	930171A0	UNIVERSAL SPANNER		7,00

ACCESSORIES

CODE	DESCRIPTION	€
03708240	AIR CAP PACKING (WHITE)	2,70
03512600	AIR CAP "L" PACKING (BLACK)	4,80
W2KIT55UK	CLEANING KIT	60,50
W2COM6190	REPAIRING KIT 2 (includes: air valve seat set, air valve, air valve spring, fluid needle spring, air valve shaft, fluid adj. guide set, trigger stud, e-stopper, needle packing cartridge).	95,50
14018621	**PCL 10 B3 SUCTION CONTAINER 1 lt.**	68,00
04904281	CONTAINER FOR PCL 10 B3	62,00
04904302	NON DRIP SET for PCL 10 B3 (2pcs./1 pk.)	8,00
94008300	LID PACKING SET FOR PCL 10 B3 (2 pcs./1 pk.)	11,00
04904311	FILTER 30 MESH FOR PCL 10 B3	1,50
14018200	**PC 12 SUCTION CONTAINER 1 lt.**	86,50
04002200	PACKING FOR PC 12	5,00
14375800	"L" ROTATING AIR HOSE JOINT	21,50
W-200-X1	QUICK FAN PATTERN CONTROL	149,50
93895611	PUSH-PULL PATTERN ADJ. SET	149,50
001004050	TWIN HOSE (Air and Fluid) 1/4"-1/4" - 5 m	69,60
001004075	TWIN HOSE (Air and Fluid) 1/4"-1/4" - 7.5 m	94,11
0010040100	TWIN HOSE (Air and Fluid) 1/4"-1/4" - 10 m	115,08
W2COM5052	FLUID TUBE 3/8" Stainless Steel	49,50

SPARE PARTS

SUPERSEDED PRODUCTS

AZ5 - ROUND PATTERN

200 ml
GRAVITY CUP

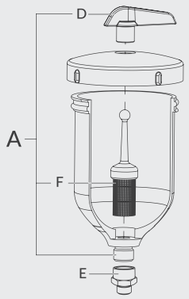

ADAPTING
NIPPLE

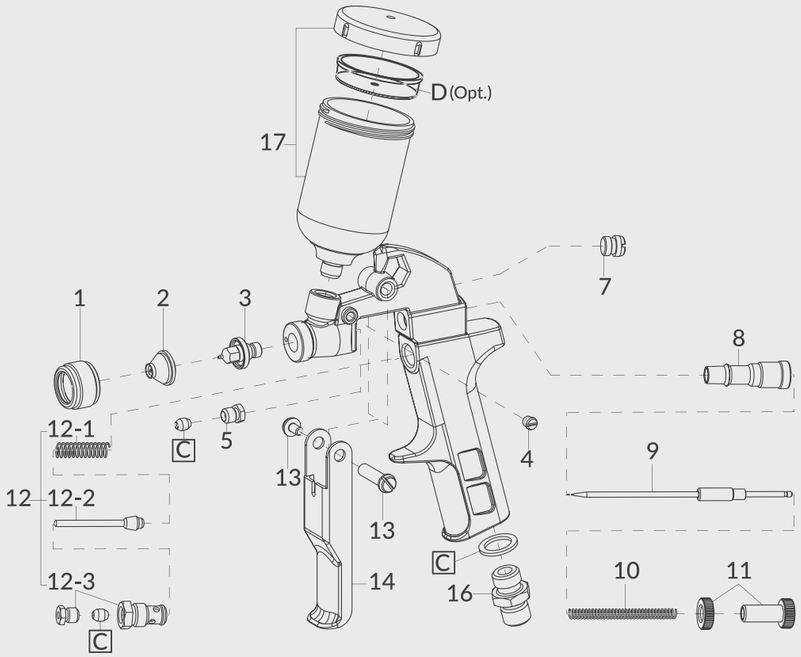

ORDER INFORMATION

REF.	CODE	DESCRIPTION	€
1	W2011140100	AIR CAP COVER	3,00
2		AIR CAP SET	6,90
3+9		NOZZLE + NEEDLE SET	15,10
4	W2COM5004	SCREW	0,50
5	W2011131100	NEEDLE PACKING NUT	2,00
7	W2010940500	PLUG	1,00
8	W2010940600	FLUID NEEDLE GUIDE	3,00
10	W2012340400	FLUID NEEDLE SPRING	3,00
11	W2012331500	FLUID ADJ. KNOB	4,00
12	W2012320200	AIR VALVE SET	8,50
12-1	W2010942100	AIR VALVE SPRING	1,50
12-2	W2012331600	AIR VALVE	2,50
12-3	W2010930400	AIR VALVE SEAT SET	6,00
13	W2COM4008	TRIGGER STUD	3,50
14	W2010941800	TRIGGER	6,00
16	W2052191414	AIR NIPPLE G1/4" M	1,50
C	W2500100400	PACKING SET	3,50

REF.	CODE	DESCRIPTION		€
17	**W0012320100**	**PCG-1P-1B-AZ GRAVITY CUP 70 ml**		7,50
D	W2KIT52	NON DRIP SET (optional)	(3 pcs./1 pk.)	6,50
A	**W0010920900**	**GRAVITY CUP 200 ml**		14,50
D	W2KIT07	NON DRIP SET	(5 pcs./1 pk.)	6,00
E	W2052591812	ADAPTING NIPPLE		3,00
F	W2KIT06	PAINT FILTER SET 50 Mesh (297µ)	(5 pcs./1 pk.)	19,00
	930171A0	UNIVERSAL SPANNER		7,00

AZ40 HTE

200 ml
GRAVITY CUP

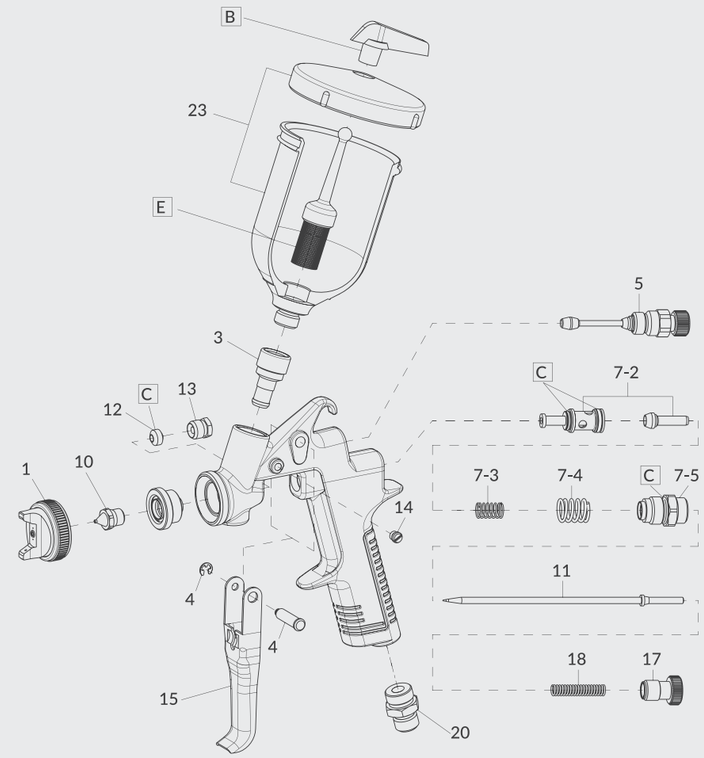

ORDER INFORMATION

REF.	CODE	DESCRIPTION	QTY.	€
1		AIR CAP SET		28,00
10+11		NOZZLE + NEEDLE SET		21,50
3	W4COM5003	THREADED BUSHING		2,00
4	W2COM4008	TRIGGER STUD		3,50
5	W2PAT40AG	PATTERN ADJ.		9,50
7	W2SUB2060	COMPLETE AIR VALVE		15,50
7-2	W2SUB2058	AIR VALVE SET		7,00
7-3	W2COM6001	AIR VALVE SPRING		1,50
7-4	W2COM6048	AIR VALVE SPRING SEAT		1,50
7-5	W2SUB3042	FLUID ADJUSTMENT GUIDE		7,00
12	W2COM2006	FLUID NEEDLE PACKING		4,50
13	W2COM3011	FLUID NEEDLE PACKING NUT		2,00
14	W2COM5004	SCREW		0,50
15	W2COM6005	TRIGGER		5,50
17	W2COM3007	FLUID NEEDLE ADJ. KNOB		2,00
18	W2COM6002	FLUID NEEDLE SPRING		2,00
20	W2COM5000	AIR NIPPLE G1/4"M		3,00
C	W2KIT12	PACKING SET	(8 pcs./1 pk.)	11,50

REF.	CODE	DESCRIPTION	€
23	**W0CUPAZ90**	**PCG 2P-2B-AZ GRAVITY CUP 200 ml**	36,00
B	W2KIT07	NON DRIP SET for 200 ml Cup (5 pcs./1 pk.)	6,00
E	W2KIT06	FILTER SET 50 MESH (297µ) for 200 ml (5 pcs./1 pk.)	19,00
23	**W0012820100**	**PCG-6P-2B-AZ GRAVITY CUP 600 ml**	13,50
B	W2KIT07	NON DRIP SET for 600 ml Cup (5 pcs./1 pk.)	6,00
E	W2KIT06	FILTER SET 50 MESH (297µ) for 600 ml (5 pcs./1 pk.)	19,00

ACCESSORIES

CODE	DESCRIPTION	€
W2KIT55UK	CLEANING KIT	60,50
930171A0	UNIVERSAL SPANNER	7,00

ANEST IWATA

SPRAY GUNS & ACCESSORIES for CAR REFINISH

CAR. REF 2021 Ed.00 November 2020

ANEST IWATA

PROFESSIONAL COATING
EQUIPMENT SPECIALIST

ANEST IWATA Italia S.r.l.
Chieri (TO) - ITALY.
info@anest-iwata-it.com
www.anest-iwata.it

ANEST IWATA Deutschland GmbH
Leipzig - GERMANY
info@anest-iwata-de.com
www.anest-iwata.de

ANEST IWATA France S.A.
Saint Quentin Fallavier, Lyon - FRANCE
info@anest-iwata-fr.com
www.anest-iwata.fr

ANEST IWATA U.K. Ltd.
St. Neots Cambridgeshire - ENGLAND
info@anest-iwata-uk.com
www.anest-iwata.co.uk

ANEST IWATA Iberica S.L.U.
Saint Adrià del Besos - Barcelona - SPAIN
info@anest-iwata-ib.com
www.anest-iwata.es

ANEST IWATA Scandinavia AB.
Partille, Göteborg - SWEDEN
info@anest-iwata-se.com
www.anest-iwata.se

ANEST IWATA Polska Sp. Z o.o.
Jasin / Swarzędz - POLAND
info@anest-iwata-pl.com
www.anest-iwata.pl

NORTH AMERICA
ANEST IWATA USA Inc.
West Chester - Ohio - U.S.A.
inquiry@anestiwata.com
www.anestiwata.com

SOUTH AMERICA
ANEST IWATA DO BRASIL COMERCIAL Ltda.
Sao Paulo - BRAZIL
contato@anest-iwata.net.br
www.anest-iwata.net.br

AUSTRALIA
ANEST IWATA Australia Pty Ltd.
Sidney - AUSTRALIA
info@anest-iwata.com.au
www.anest-iwata.com.au

SOUTH AFRICA
ANEST IWATA South Africa Pty Ltd.
Johannesburg - REPUBLIC OF SOUTH AFRICA
www.anest-iwata.co.za

ASIA
ANEST IWATA Coating Solutions Corporation
Yokohama - JAPAN
www.anest-iwata.co.jp

ANEST IWATA KOREA Corporation
Ansan City - KOREA
inquiry@aikr.co.kr
www.aikr.co.kr

ANEST IWATA Motherson Coating Equipment Ltd.
Noida - INDIA
sales@aim.motherson.com
www.motherson.com/anest-iwata-motherson.html

ANEST IWATA Russia LLC
Moscow - RUSSIA
tam@anestiwata.ru
www.anestiwata.ru

ANEST IWATA Shanghai Corporation
Shanghai - CHINA
customer@anest-iwata-sh.com
www.anest-iwata-sh.com

ANEST IWATA Taiwan Corporation
Hu-Kuo - TAIWAN R.O.C.
service@anestiwata.com.tw
www.anestiwata.com.tw

ANEST IWATA Vietnam CO. Ltd.
Ho Chi Minh City - VIETNAM
info@anest-iwata.vn
www.anest-iwatasoutheastasia.com

PT. ANEST IWATA Indonesia
Jakarta - INDONESIA
www.anest-iwatasoutheastasia.com

ANEST IWATA Southeast Asia CO. Ltd.
Bangkok - THAILAND
info@anest-iwata.co.th
www.anest-iwatasoutheastasia.com

HEADQUARTER
ANEST IWATA Corporation
Yokohama - JAPAN
www.anest-iwata.co.jp

ANEST IWATA Strategic Center S.r.l.
Cardano al Campo (VA) - ITALY
info@anest-iwata-st.com
www.anest-iwataeu.com

2021 PRICE LIST

CAR REFINISH